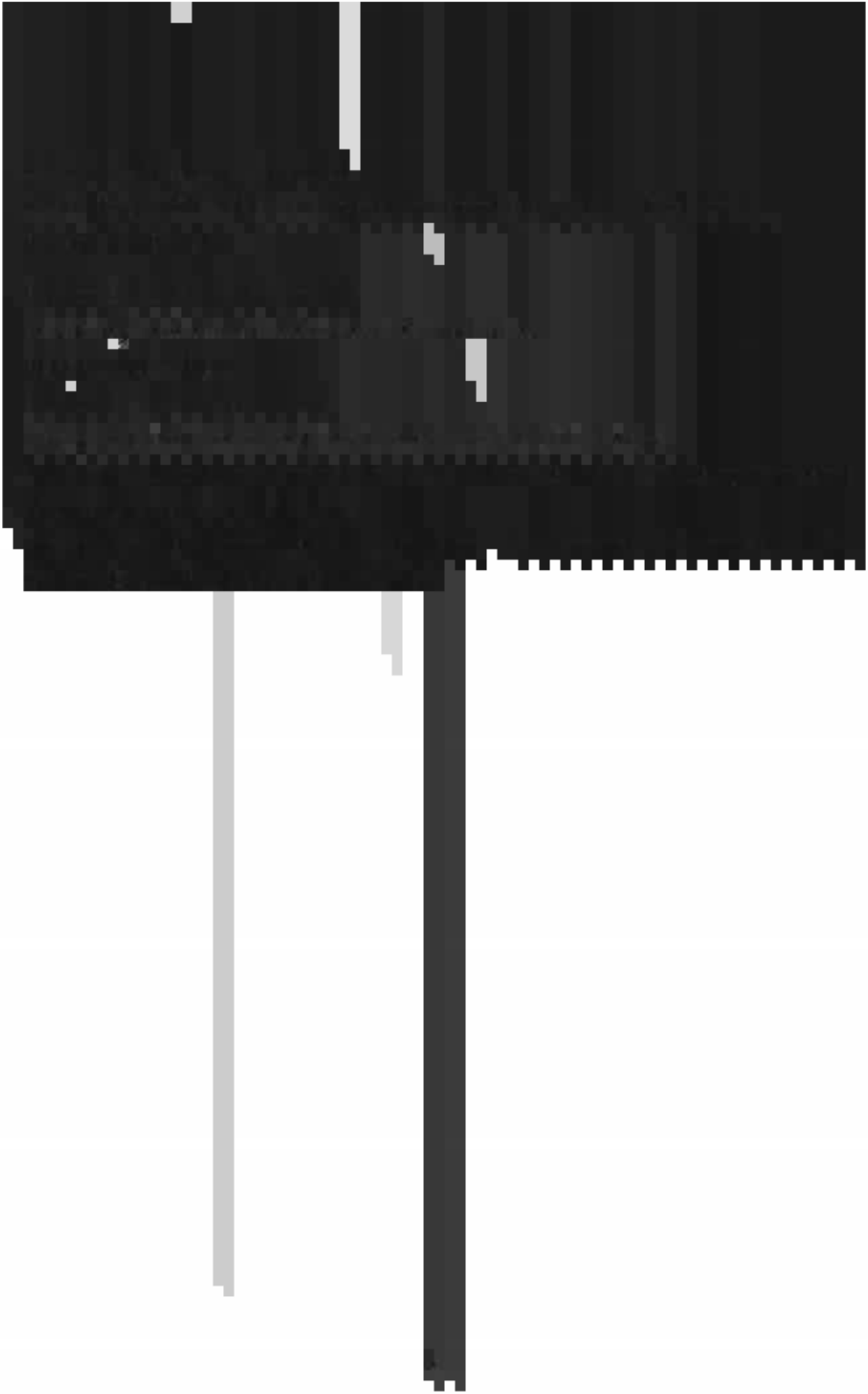

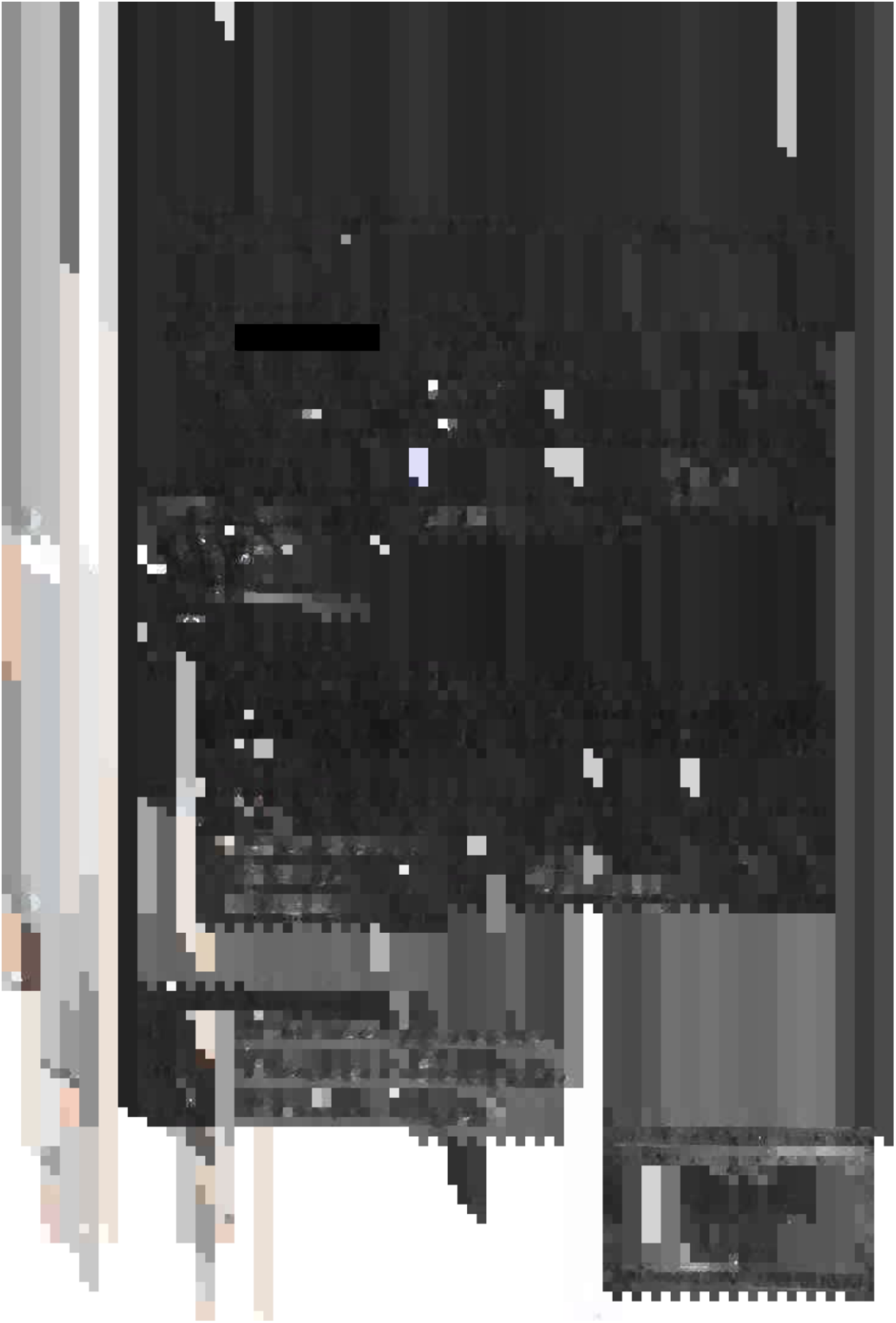

The Strategic Fuel Fund Association (SFF) acquires, maintains, monitors and manages the country's strategic energy feedstock's and carriers in order to ensure security of supply of the Republic.

5. Where the applicant is a company provide:
   (a) certified copy of the certificate of incorporation; **N/A**
   (b) the names of current directors; and **N/A**
   (c) details regarding the ownership or shareholding structure, including particulars of the shareholders; **Refer ANNEXURE S2.**

6. Where the applicant is a Trust as defined in the Trust Property Act, 1988 (Act No. 57 of 1988), provide: **N/A**
   (a) a certified copy of the trust deed or trust instrument and in the event of same having been amended, copies of the amended page(s) duly certified; **N/A**
   (b) Letters of Administration duly certified, issued to the trustees, and if this document has been amended, then a copy of the current Letters of Administration duly certified; **N/A**
   (c) certified copies of the identity documents of the trustees and beneficiaries and proof of each one's residential address; **N/A**
   (d) proof of the address at which the Trust is conducting its business such as an account of the local authority for rates, taxes, electricity or water which should reflect the physical address of the Trust; and **N/A**
   (e) a resolution of the trustees authorising any one or more of them to apply for the licence which reflects the names of the trustees that attended this meeting and each one's vote for or against the resolution. **N/A**

7. Where the applicant has authorised another person to submit the licence application on its behalf, documentary proof of authorisation and a certified copy of the identity document of the mandated/ authorised representative of the applicant.
   REFER ANNEXURE C. Authorisation Letter
   REFER ANNEXURE D. ID Copy (Confidential)

8. Proof that the applicant is the owner of the petroleum pipeline, storage facility or loading facility.

REFER ANNEXURE E: TOA between SFF and TNPA (Confidential). Page 54 Clause 6.2.

ANNEXURE E1: Share Certificate

9. Where the owner of the petroleum facility is not the owner of the land on which the facility is situated, proof that the applicant is the owner of the petroleum facility and proof of authorisation to use the land.

   The TOA between SFF and TNPA is attached as ANNEXURE E (Confidential)

10. Where the facility is owned by more than one person, the applicant must provide –

    (a) details of the co-ownership and documentary proof thereof or a solemn declaration to that effect; and **N/A**

    (b) written mandate from each of the other owners authorising the applicant to apply for the licence on their behalf. **N/A**

11. Documents demonstrating the administrative abilities of the applicant[1]

    REFER ANNEXURE DD1

12. Documents demonstrating the financial abilities of the applicant.[1]

    REFER ANNEXURE J (Confidential)

    REFER ANNEXURE SS (Confidential)

    REFER ANNEXURE SS1 (Confidential)

13. Documents demonstrating the technical abilities of the applicant.[1]

    ANNEXURE K1 TO K5

14. Provide a valid Broad-Based Black Economic Empowerment (B-BBEE) certificate or a sworn affidavit which reflects the company's Black ownership percentage. **ANNEXURE S3**

---

[1] Only original or certified copies will be accepted by the Energy Regulator

CHAPTER 3 - DETAILS OF APPLICATION

Complete the appropriate form:

Petroleum Pipelines

- **Construction of a petroleum pipeline (PPL.p.F1)**
- Conversion of a petroleum pipeline (PPL.p.F2)
- Operation of a petroleum pipeline (PPL.p.F3)

Petroleum Storage Facilities

- Construction of a petroleum storage facility (PPL.sf.F1)
- Conversion of a petroleum storage facility (PPL.sf.F2)
- Operation of a petroleum storage facility (PPL.sf.F3)

Petroleum Loading Facilities

- **Construction of a petroleum loading facility (PPL.lf.F1)**
- Conversion of a petroleum loading facility (PPL.lf.F2)
- Operation of a petroleum loading facility (PPL.lf.F3)

CONSTRUCTION OF A PETROLEUM PIPELINE (PPL.p.F1)

Provide the following information/documents. Each numbered item below should be copied and must appear at the top of a page with your information below.

1. A technical description of the pipeline adequately specifying –

(a) Details of pipeline

The route (from/to)		**From SFF Berth 104 to Avedia Energy Terminal**				
Number of pump stations		**N/A**				
Number of pig launching & receiving stations		**One pig Launching station and one pig receiving station.**				
Node[1] No.	**Start GPS coordinates**	**End GPS coordinates**	**Diameter, mm**	**Length, m**	**Planned design capacity (m^3/hour)**	**Flow direction**
0	33°02'00.1"S 17°59'00.7"E	32° 59'26.77" S and 18° 00'16.74" E	200mm	8200m	350 tons/hr	(uni-directional)

1 Node denotes sections of pipeline system with different diameters and/or destination/branches

Node[1] No.	**Pump station locations & GPS coordinates**	**Pig launching stations & GPS coordinates**	**Pig receiving stations & GPS coordinates**	**Destination depots**
0	N/A	33°02' 26.77" S and 17°58' 58.04" E	32° 59'26.77" S and 18°00'16.74" E	Avedia Energy Terminal

(b) connections with other pipeline systems (including proof of agreement with owners of such pipelines); **Berth 103 is for crude oil loading facility. Berth 104 is for LPG loading facility. New loading arms are still to be constructed together with the auxiliary pipeline to Avedia Energy Terminal. Tender process started for the Appointment of Consulting Engineers to Construct the berth.**

(c) auxiliary equipment like accumulation and inter mixture tanks.

2. Detailed maps showing the pipeline route(s). **REFER ANNEXURE AA**
3. A copy of the basic design philosophy of the intended petroleum pipeline, outlining all design requirements, feasibility, concept study and a preliminary design, including piping and instrumentation diagrams (P&IDs) and basic block flow diagrams indicating envisaged pump stations, control and communication systems (including leak/rupture detection), as appropriate. **REFER ANNEXURE BB**
4. In the case of greenfield projects, for which a licence is sought, information on the economic, market and financial forecasts and other relevant information upon which the proposed project for the licence applied for is based. **REFER ANNEXURE A**
5. A certified copy of the Record of Decision of the relevant environmental authorities in accordance with the National Environmental Management Act, 1998 (Act No. 107 of 1998) permitting the activity for which the licence is sought, if applicable. If the Record of Decision has not been obtained, then **REFER ANNEXURE DD**
   (a) submit:
      (i) proof of application for such permit; or
      (ii) a solemn declaration outlining the applicant's plans and ability to comply with all applicable labour, health and environmental legislation;

      or
   (b) state the reason why the permit is not applicable.
6. List all applicable: **REFER ANNEXURE EE**
   (a) *legislation;*
   (b) *operating and technical standards; and*
   (c) *codes and specifications (including those relating to safety) to be used in the activities for which this application is made, for example:*
      (i) *South African National Standards (SANS)*
      (ii) *the American Society of Mechanical Engineers (ASME) Standards;*
      (iii) *American Petroleum Institute (API) Standards; and*
      (iv) *European Norms (EN).*
7. Status or expected status in terms of the National Key Points Act, 1980 (Act No.102 of 1980). **REFER ANNEXURE FF**
8. Details of existing and proposed security arrangements; **REFER ANNEXURE GG**

9. Development programme, including -

(a) planned capacity of the project during the various stages of development; **Capacity will remain the same.**

(b) schedule of implementation and minimum investment commitments for looping, receipt and delivery points, pumping stations and other development programmes; and

(c) deadline to commence service for each stage contemplated.

ANNEXURE A: SFF COMPANY PROFILE

SFF PROFILE

SFF Vision

To be the guarantor of strategic fuels for the benefit of our communities.

Mission Statement

We secure the supply of strategic fuels through i) operating efficiently ii) collaborating with strategic partners in exploring new opportunities and iii) by leveraging agile and empowered people operating responsibly in a compliant manner.

SFF Values

We will achieve our mission through the following values

- Respect.
- Transparency.
- Accountability.
- Collaborative.
- Safety.
- Innovation.
- Empowerment.

1. BACKGROUND

The SFF Association ("SFF") is the strategic oil reserve agency of the Republic with crude oil storage terminals in Milnerton and Saldanha Bay as well as a petroleum products storage facility in Montague Gardens. SFF's mandate is to procure and manage strategic crude oil reserves on behalf on the government and is derived from its memorandum of incorporation. All costs incurred in storing and managing the country's strategic inventory of crude oil is financed from income that SFF derives from leasing, on commercial terms, unutilised capacity in the crude oil and petroleum products storage terminals.

2. COMPANY PROFILE

2.1. Objectives of SFF

The core Strategic function of SFF as defined by the SFF Memorandum of Corporation is to:

To carry on the business of promoting, conducting, establishing, facilitating, guiding, and assisting, by the establishment of a fund or funds and/or in any other manner whatsoever, the location, procurement, storage, production, and/or exploitation of fuels, materials, products, and commodities which are or may become of strategic importance to the Republic of South Africa, not for gain but solely in the communal interests of the general public, and to perform any other acts towards this end.

This MOI can also be expressed, in a matrix format, as per below:

Core Activities	Outcome	Focus area	How	Motivation
•Promote •Conduct •Facilitate •Guide •Assist •Establish	•Location •Procurement •Storage •Production •Explotation	•Fuels •Materials •Products •Commodities	•Establish fund(s)	•Not for gain but in the communal interest of RSA

2.2. SFF Group Profile

The SFF Association is a company incorporated as a non-profit company in terms of *s*13 of Companies Act 71 of 2008. SFF's shares are non-transferable and are held by its holding company CEF (SOC) Ltd, which in turn is wholly owned by the State (section 1 D of the Central Energy Fund Act 38 of 1977). The current business of SFF is the storage and management of government and privately-owned stocks of crude oil.

The strategic reserves managed by SFF and owned by Government can only be released into the market through a Ministerial Directive whenever disruptions in the supply chain of petroleum products have occurred that could place the country's economy at risk. The Act 38 of 1977 provides the statutory framework for the management of proceeds from the sale of crude oil managed by SFF on behalf of the Republic.

2.2.1. Non-profit company and profits

The term 'non-profit does not mean that the company may not make any profit at all. Maleka Famida Cassim state that:

> 'Despite the label 'non-profit' company, it must be underscored at the outset that as a general principle, a non-profit company is not wholly precluded from making profits. A non-profit company may validly make profits, as long as it complies with the basic prohibition on distribution to its members and controllers, and

provided that all its assets and income, however, derived, are applied to advance its stated objects.

The gist of the matter thus is that profit-making activity may not be the main or primary purpose or object of a non-profit company – it may at best be only a secondary activity that is consistent with or ancillary to the company's non-commercial objects and is used as a means of promoting and advancing the company's non-commercial objects.'[1]

SFF is incorporated as a non-profit company in terms of Act 71 of 2008 and therefore all commercial activities undertaken by SFF are pursued for the sole purpose of funding SFF's reason for being; the mandate of SFF. The rationale for SFF to engage in commercial activities is solely to minimise dependency on the State's financial resources for the operational costs of managing strategic stocks.

The main commercial activity undertaken by SFF is the leasing, on a commercial basis to both local and international trading companies, uncommitted crude oil storage capacity not required for strategic stock purposes at the Saldanha Bay and Milnerton terminals. Income generated from this activity is utilised to offset SFF's operational expenses.

2.2.2. Subsidiaries

SFF has two subsidiaries, Klippoortjie Koolmyne (SOC) Limited and Mahnes Areas (SOC) Limited.

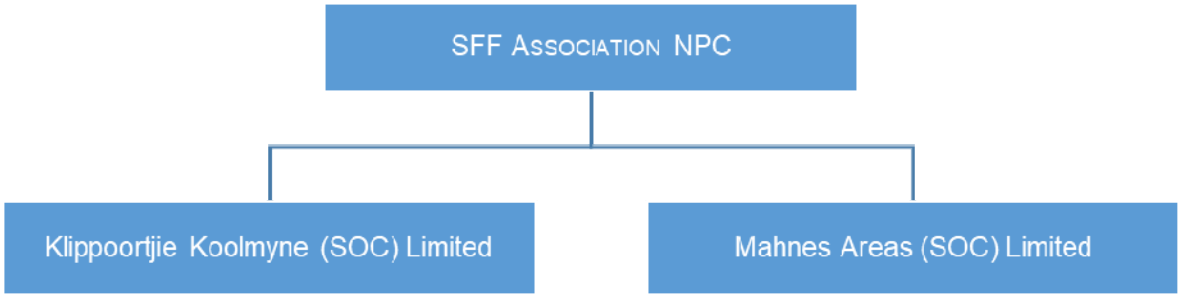

Klippoortjie Koolmyne was previously a dormant entity that will now start operating as an investment entity for all oil and gas upstream opportunities that SFF will be pursuing.

Pursuant to s54(2) directive issued to SFF in terms of Public Finance Management Act 1 of 1999 ("PFMA"), Klippoortjie Koolmyne (SOC) Ltd ("Klippoortjie") will be responsible for evaluating and investing in all upstream opportunities. Therefore, all activities related to the Nile-Orange project will be migrated to Klipppoortjie and detailed information is in the Klippoortjie Corporate Plan.

2.3. SFF Governance Structures

2.3.1. Board of Directors

In terms of section 49 of the PFMA, the Board is the accounting authority of SFF. SFF has a unitary Board structure made up of a majority of non-executive directors, appointed by the shareholder. The size of the Board is dictated by Section 1 (4) of the Central Energy Fund Act, No. 38 of 1977 ('CEF Act'), as amended, which permits a maximum of 8 directors appointed by the Shareholder. In line with the recommendations of KING IV the positions of Chairman and Chief Executive Officer are separately held to ensure a clear division of duties.

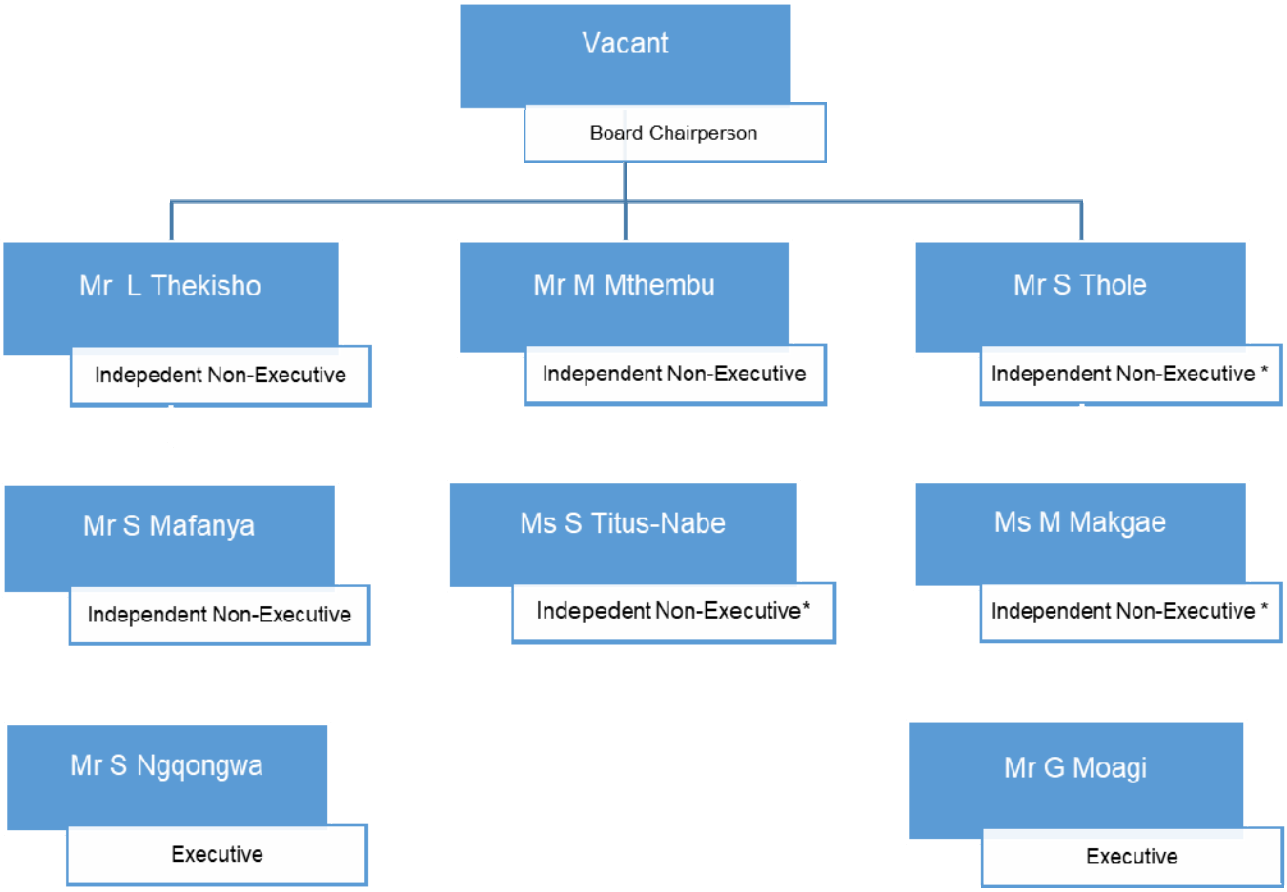

Name	Race	Gender	Qualifications
L Thekisho	Black	Male	
M Mthembu	Black	Male	
S Thole	Black	Male	
S Mafanya	Black	Male	
S Titus-Nabe	Black	Female	
M Makgae	Black	Female	
S Ngqongwa	Black	Male	
M Moagi	Black	Male	

The Board has established several committees in order to assist it to discharge its duties. All committees operate under approved terms of reference, which may be updated from time to time to align with the latest developments in corporate governance. Each committee operates within these defined terms of reference and is chaired by a non-executive director or independent member. SFF has two board sub-committees, namely: the Board Audit and Risk Committee (BARC) and the Human Resource Committee.

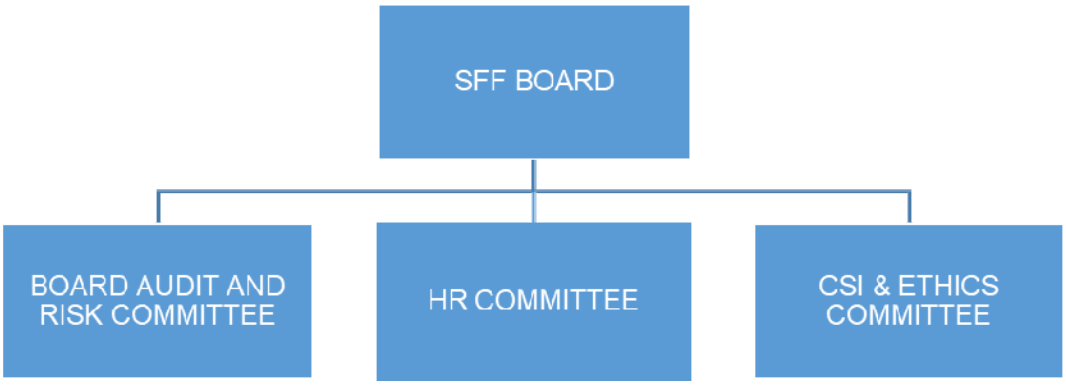

To enable the directors to meet their fiduciary duties, the Board sets standards and implements systems of internal control and risk management that are designed to provide reasonably, but not absolute assurance against material misstatements and losses. SFF maintains internal financial controls to provide assurance regarding:

a. The safeguarding of assets against unauthorised use or disposition.
b. The maintenance of proper accounting records and the reliability of financial information used within the business and for publication.

The adopted governance pillars supporting the Board decision making process are provided below.

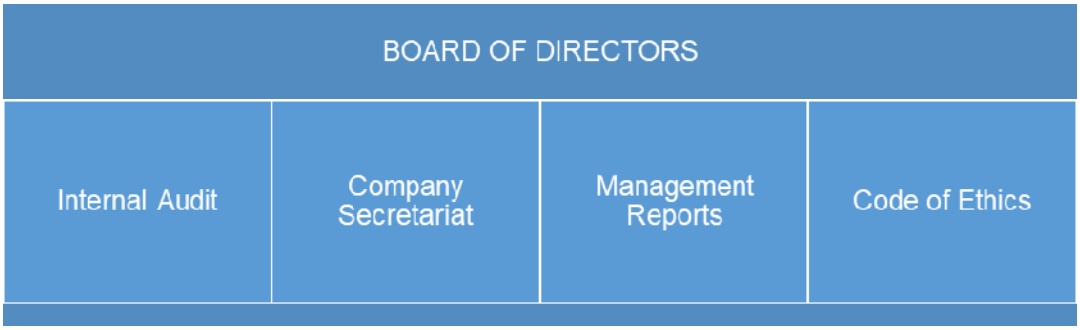

2.3.2. Internal Audit

CEF provides internal audit services to SFF that has the support, and cooperation of both the Board and management. The internal audit function has written terms of reference, provided by the board of directors, setting out its purpose, authority and responsibilities. The internal audit function is under the control and direction of the Board Audit and Risk Committees (BARC), and reports at the highest level of authority and at all BARC meetings.

The Internal Audit Department, headed by the Chief Audit Executive, is accountable to the BARC. The internal audit function carries out its work in terms of an approved internal work plan based on the risk framework of the company. The annual work plan is approved by the BARC. The Chief Audit Executive has full access to the chairpersons of the BARC and Board. The key responsibilities of the internal audit function are to the BARC and/or Board, in discharging its governance responsibilities and to perform the following functions:

i. Evaluating the company's governance processes including ethics;
ii. Performing an objective assessment of the effectiveness of risk management and internal control framework
iii. Systematically analysing and evaluating business processes and associated controls; and
iv. Providing a source of information, as appropriate, regarding instance of fraud, corruption, unethical behaviour and irregularities.

The internal audit function adheres to the International Standards for Professional Practice of Internal Auditing and Code of Ethics. The Chief Audit Executive developed and maintained a quality assurance and improvement program. The internal audit function is subjected to an external quality review at least every 5 years.

2.3.3. Company Secretariat

The Company Secretary is responsible for ensuring that the company's affairs, as well as the Board proceedings, are properly carried out in accordance with the relevant laws and standards. The Company Secretary provides the Board with guidance and advice on matters of business ethics and good governance, as well as on the nature and extent of their duties and responsibilities and how such duties and responsibilities should be properly discharged. Each of the directors has unrestricted access to the advice and services of the Company Secretarial team and company information and is entitled to seek independent professional advice, at the Company's expense in pursuance of their duties as a director. The company secretary is responsible to the Board.

2.3.4. Management reporting

Comprehensive management reporting disciplines are in place, which includes the preparation of an annual corporate plan and budget approved by the Board. Monthly and quarterly results are reported against the approved budget to the BARC and Board respectively for review.

There are comprehensive management reporting disciplines in place, which include the preparation of annual budgets by all divisions and reporting thereon on a quarterly basis. The budget and capital expenditure are reviewed

and approved by the Board. Quarterly performance results and the financial status of the company and group are reported against approved targets.
Profit projections and forecasted cash flows are updated monthly, while working capital and borrowing levels are monitored on an ongoing basis. Executive management meets on a regular basis to consider day-to-day issues pertaining to the business of the company.

2.3.5. Code of Ethics

SFF has a code of ethics that requires all employees to observe the highest ethical standards thereby ensuring that business practices are conducted in a manner that is beyond reproach. Directors and employees are required to maintain the highest ethical standards, ensuring that business practices are conducted in a manner that, in all reasonable circumstances, is beyond reproach.
The Code of Ethics also serves as a guide to assist the Board (and its committees), Management, Staff, and Contractors of the company in making ethical decisions and engaging in appropriate lawful conduct.
The company has contracted the services of an independent hotline service providing for the confidential reporting of fraud and other inappropriate behaviour. Employee breaches are dealt with in accordance with the disciplinary policy. In addition, directors are required to annually declare their interests in contracts as well as directorships in other companies in accordance with the Companies Act.

3. SFF FINANCIAL STATEMENTS

SFF Financial Statements ending March 2020; 2021 and 2022 are attached.

4. SFF'S EXISTING FACILITIES

4.1. Saldanha Crude Oil Terminal

[redacted]

The concrete tanks have an internal coating of acrylonitrile and have been in operations for approximately forty (40) years.

4.2. Oil Pollution Control

The Site is located in Saldanha Bay and provides Oil Pollution Control services for crude oil vessels discharging at the Saldanha Jetty. OPC

also provides pollution control services to Astron Energy (Cape Town Refinery) and other Third (3rd) Party Trading vessels. Service provision includes spill containment, oil spill clean-up and deflection of oil spill from migration to the sea.

4.3. Milnerton Crude Oil Terminal

SFF Milnerton is located within the city limits of Cape Town in the Milnerton area. The Terminal is linked to the Cape Town harbour by means of a pipeline, which is one of three pipelines linking the harbour, Astron Energy, and the Milnerton Terminal. There is also a one-directional pipeline linking the SFF Milnerton Terminal to the SFF Saldanha Terminal.

The Milnerton Terminal consists of thirty-nine (39) above-ground, floating roof, crude oil storage tanks, with a total capacity of 7.5M Bbls. The Terminal is currently not operational – the storage tanks require refurbishment in order to be operational again.

4.4. Ogies Crude Oil Storage Facility

The crude oil storage facility in Ogies, Mpumalanga was used by the apartheid government as a counter for 1978 UN oil sanctions. Crude oil was stored in four (4) underground depleted coal mines, each with a capacity of approximately 120 Million barrels. The mines were later emptied, with the last easily removable oil pumped out in 2008.

Residual hydrocarbons however, remain with the mines. Operations at the SFF Ogies facility therefore require continuous pumping out of residual hydrocarbons in the mines to prevent the risk of hydrocarbons seeping upward into the local groundwater aquifer.

5. SFF'S ALIGNMENT TO GOVERNMENT'S STRATEGIC INITIATIVES

SFF is a fully South African Company and is committed to creating sustainable opportunities to grow the South African economy and assist the Government in fulfilling its mandate. Currently South Africa faces a number of challenges, which are inhibiting economic growth.

These include:

- Insufficient energy infrastructure;
- Uneven economic distribution – by geography and race;
- Shortage of Skills;
- Limited beneficiation of materials, technology and knowledge, and;
- Limited foreign investment;

SFF's Cooperate for 2020_25FY took into consideration the following Government Strategic Initiatives and Policies:

- Agenda 2063 – The Africa we want, Final edition, April 2015;
- National Development Plan 2030: Our Future - make it work;
- Seven Prioritise to drive the National Development Plan (7 Point Plan);
- The Integrated Energy Plan 2016;
- Minister of Minerals Resources and Energy Budget Vote 26;

5.1. SFF 2020_25FY Corporate Plan Alignment with the Presidential Seven Point Plan

During the opening of the 6th Parliament, the president of the Republic in his State of Nation address identified seven government priorities and these are incorporated into the SFF Corporate plan as per below:

GOVERNMENT PRIORITY	HOW IT IS INCORPORATED INTO SFFF CORPORATE PLAN
Economic transformation and job creation	The Nile Orange project has already created jobs in the upstream division during this oil exploration phase and will create more as the project progress towards oil fields development; Infrastructure development projects will present opportunities for empowered companies during the procurement of professional and engineering services and thereby supporting government's drive to transform the economy;

Education, skills and health	The growth projects in the corporate plan will require a workforce with new skills and high levels of education. The human resources skills development plan, provides details on how SFF will improve both the skills and the education of its workforce in pursuit of its growth agenda. The plan also incorporates an improved Study Assistance Policy for employees.
Consolidating the social wage through reliable and quality basic services	Energy security is a basic requirement for an economy the size of South Africa. SFF's corporate plan is pursuing the objective of ensuring security of supply of crude oil, petroleum products and gas in South Africa and the projects that will be developed and implemented during the planning horizon are aimed at delivering on this objective.
Social cohesion and safe communities	SFF is a responsible corporate citizen and its success is intertwined with the success of the communities in operates in. The corporate plan includes a Social Investment plan that is aimed at addressing the imbalances of the past by selectively investing in vulnerable communities and providing tangible assistance to those members of the communities that cannot escape by themselves the crippling poverty.
A capable, ethical and developmental state and	Underpinning the implementation of the this corporate plan is a fraud management plan and governance structures will pre-approved levels of authority and clear segregation of duties and processes that identify and prevent conflict of interests.
A better Africa and World	The Nile Orange project is SFF's flagship project and a clear demonstration that South Africa is committed to investing in Africa. The investment will not only create a better South Africa through security the country's energy security, it will provide a direct injection of capital into the South Sudan economy.

ANNEXURE AA: TECHNICAL DRAWING OF PIPELINE ROUTE

CONFIDENTIAL IN ENTIRETY

ANNEXURE B: REQUESTED CONDITIONS OF LICENCE

ANNEXURE BB: PIPELINE BASIC DESIGN PHILOSOPHY

ANNEXURE BB

The final basic design philosophy of the pipeline outlining all design requirements

Small gas carriers of capacity 3500 – 7 500 tonnes to be received at Berth 104:

LPG properties:

Density: 530 kg/m^3

Dynamic viscosity: 0,13 cP

Composition of LPG imported assumed to be 70% propane and 30% butane

Other requirements:

Marine loading arm(s) to import LPG, linear velocity limited to 10 m/s,

Suitably sized LPG pipeline to offload tanker ship in less than 24 hours, and supply product to Avedia Energy LPG Terminal.

No vapour return and no flaring of gases in Port of Saldanha.

Pipeline piggable for maintenance and integrity inspections,

All imported LPG will have to be stenched (mercaptan),

The available pressure at gas carrier offload manifold: 20 barg (gauge pressure),

Pressure in vapour space of receiving vessel: 480 kPa,

Thermal and overpressure to relief from pipeline system into LPG bullets,

Spill containment on berth,

Underground pipelines to have cathodic protection.

Environmental protection (by TNPA),

Fire protection facilities (water and foam premix foam supplied by TNPA),

No compressor station required,

No nitrogen station required,

Design to allow for mobile pig launcher / receiver to be connected to pipework if and when required.

Feasibility, concept study and a preliminary design,

A feasibility study and preliminary design was done by Kantey & Templer Consulting Engineers along with a cost estimate up to 30% accuracy. Their study specified pipeline class and sizing (class 300, 8", 350 m^3/h, offloading a vessel within 24 hours according to operations requirements and considered various pipeline routes. The final LPG route along A – B – C – H – I – J – F is shown below:

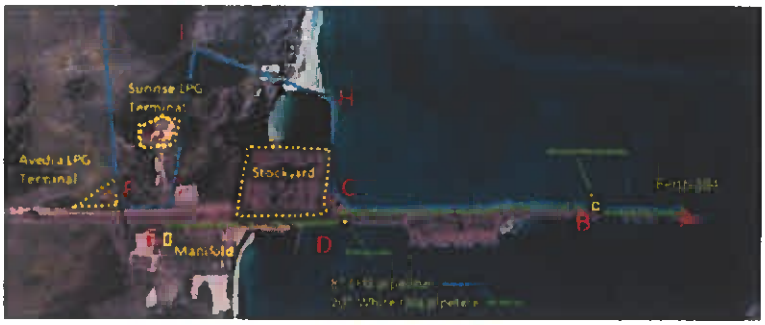

Route:
From Berth 104, supported off Langebaan side of jetty, new valve chamber, pipelines buried next to existing Crude Oil lines, LPG pipeline continues along same route as existing Crude Oil lines, around pond to join Sunrise-to-Avedia servitude to Avedia.

A list of acts and standards complied with follows below:

Legislation:

Act No. 60 of 2003: Petroleum Pipelines Act

Act No. 85 of 1993: The Occupational Health & Safety Act

Major Hazardous Installation Regulations made in terms of the OHS Act, including MHI Regulations, Pressure Equipment Regulations and similar

Act No. 107 of 1998: The National Environmental Management Act

Act No. 107 of 1998: National Environmental Management Act

Act No. 73 of 1989: The Environmental Conservation Act

Act No. 12 of 2005: National Ports Act

Act No. 102 of 1980: National Key Points Act

Act No. 120 of 1977: Petroleum Products Act

Technical standards and codes

API 5L: Specification for line pipe

API Standard 2510: Design and Construction of LPG installations (at marine and pipeline terminals)
ASME B31.3: Code for pressure piping Process Piping
ASME B31.4: Code for Pipeline Transportation Systems for Liquids and Slurries
ISGOTT International Safety Guide for Oil Tankers and Terminals (6th Edition)
SANS 61508: Functional safety - Functional safety of electrical/electronic/programmable electronic safety-related systems
SANS 61511: Functional safety - Safety instrumented systems for the process industry sector
SANS 10086-1: The installation and maintenance of equipment used in explosive atmospheres, Part 1: Installation including surface installation on mines
SANS 10089-1: The petroleum industry, Part 1: Storage and distribution of petroleum products in above-ground bulk installations
SANS 10089-2 The petroleum industry, Part 2: Electrical and other installations in the distribution and marketing sector
SANS 10108: The classification of hazardous locations and the selection of apparatus for use in such locations
SANS 1200: Standardized specifications for civil engineering construction
SANS 15589-1: Petroleum and natural gas industries Cathodic protection of pipeline transportation systems, Part 1: On-land pipelines
SANS 347: Categorization and conformity assessment criteria for all pressure equipment
SANS 60079-10-1: Explosive atmospheres, Part 10: Classification of areas explosive gas atmospheres
NFPA 58: Liquefied Petroleum Gas (LPG) Code

including piping and instrumentation diagrams (P&IDs) and basic block flow diagrams indicating envisaged pump stations,

No pump stations in the pipeline are envisaged at this stage. A P&ID diagram is attached. Note it contains the refined products line as well, LPG is in the bottom half.

control and communication systems (including leak/rupture detection), as appropriate.

Communication systems and leak and rupture detection will be incorporated in the design for construction.

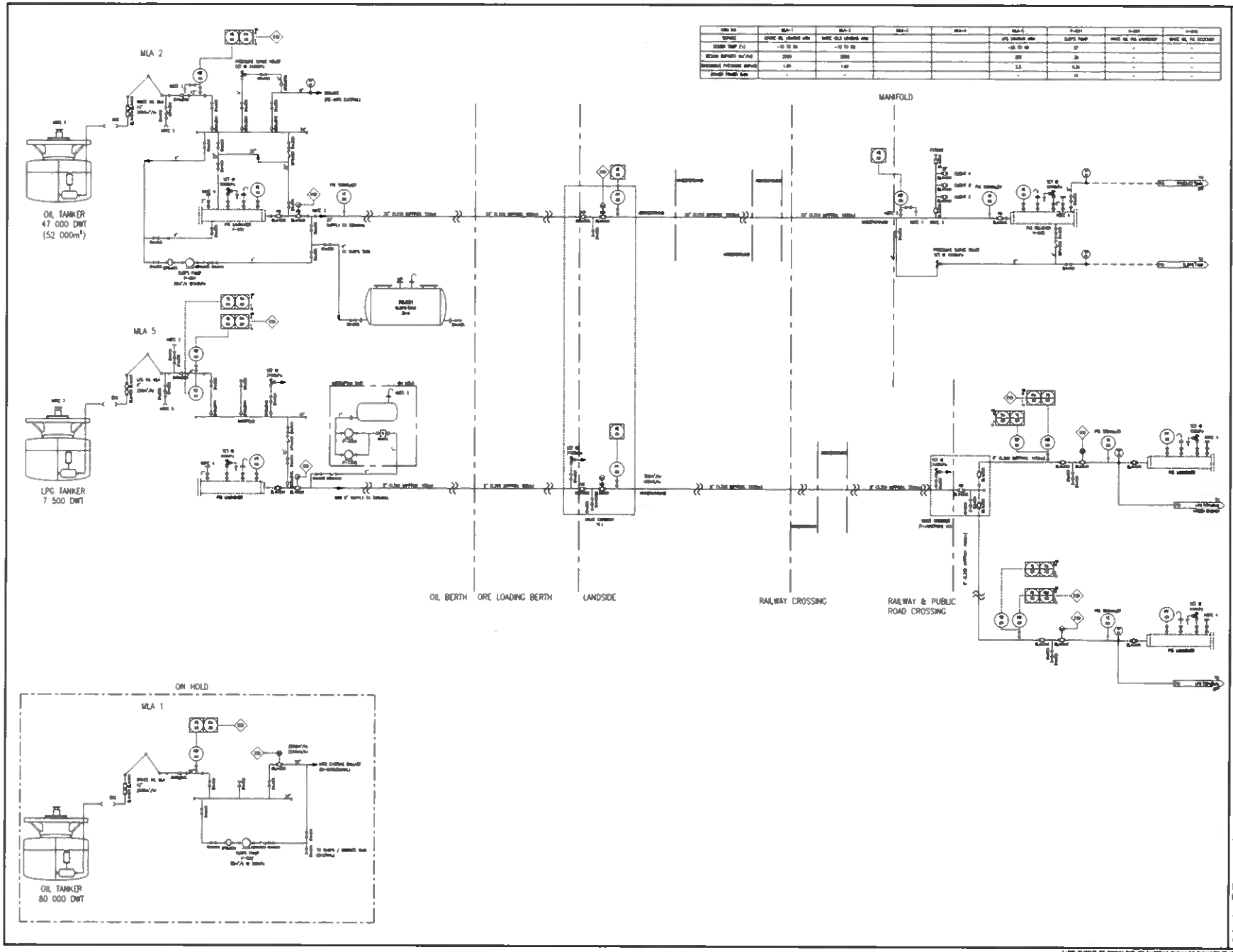

	MLA-1	MLA-2	MLA-3	MLA-4	MLA-5	P-201	P-301	P-302
TOPSIDE	CRUDE OIL LOADING ARM	WHITE OILS LOADING ARM			LPG LOADING ARM	SUPPS PUMP	WHITE OIL PIG LAUNCHER	WHITE OIL PIG RECEIVER
DESIGN TEMP (°C)	-10 TO 30	-10 TO 30			-45 TO 30	37	-	-
DESIGN DENSITY (kg/m³)	1000	1000			500	20	-	-
MAXIMUM PRESSURE DEPTH	1.01	1.01			3.5	0.25	-	-
SHORE TANKS (km)	-	-			-	10	-	-

© COPYRIGHT
THIS DRAWING AND DESIGN ARE COPYRIGHTED AND THE PROPERTY OF SAFFO & TEMPLER AND MAY NOT BE REPRODUCED IN WHOLE OR IN PART, WITHOUT THE WRITTEN PERMISSION OF SAFFO & TEMPLER.

NOTES:

1. [illegible]
2. [illegible]
3. [illegible]
4. [illegible]
5. [illegible]
6. [illegible]
7. [illegible]

REV	DESCRIPTION	DR	CHKD	APP	DATE
A	[illegible]	[illegible]	[illegible]	[illegible]	[illegible]
B	[illegible]	[illegible]	[illegible]	[illegible]	[illegible]

	INITIALS	SIGN	DATE
DESIGNED	[illegible]		
DRAWN	[illegible]		
CHECKED	[illegible]		
PROJECT ENG	[illegible]		
APPROVED	[illegible]		

K&T
KANTEY & TEMPLER
CONSULTING ENGINEERS
[illegible]

CLIENT
SFF
A Subsidiary of SFF Cyprus Ltd

PROJECT
SFF SALDANHA BERTH 104

TITLE
PIPING & INSTRUMENTATION DIAGRAM

SCALE :	NTS	A0
DRAWING No.	18613P-400	B

SALDANHA BAY LPG PROJECT -

REVISED APRIL 22

ACTIVITY	REMARKS	February	March	April	May	June	July	August	Sept	October	Nov	Dec	2023 Jan	Feb	March	April	May
Feasibility Study for Pipeline and route	K & T																
Negotiate/ Tender for pipe design	If allowed, this is advised																
Award Pipeline Design	K & T																
Get the pipe route approved																	
Tender for Construction of Pipeline																	
Contractor awarded job																	
Purchase 8200m of pipe	This is an unknown lead time		This could take some 5 to 6 months to get on site														
Construction of pipeline	100m/day , 8200/100= 82 days										400m	2600m	2600m	2600m	2600m		
Jetty work to fit Loading arms	After 18 months																
Comissioning of Pipeline	Separate Contractor																
Hand over																	
COST PROJECTION	R152m		R500k	R500k	R500k	R500k	R500k	R500k	R82m	R3m	R10m	R13m	R13m	R13m	R13m	R2m	

LPG PROJECT

Pipeline- Saldanha Jetty to Avedia

		2022			2023				2024			
ACTIVITY	REMARKS	1st Q	2nd Q	3rd Q	4th Q	1st Q	2nd Q	3rd Q	4th Q	1st Q	2nd Q	3rd Q
Competition Commission Approval	Sunrise Problems Effect											
Design & Construction Pannel formulated												
Possible delay in awarding the a contractor	Procurement Delay											
Design of the Pipeline awarded												
Possible delay in awarding the constution of the Pipeline	Expect opesition to object											
Pipeline construction Awarded												
Pipe ordered for delivery	8200m of 8" class 300 pipe											
Pipeline Construction from a min of 2 locations	Target 100m per day min.											
Pipe commisioned and hand over												

ANNEXURE C: AUTHORISATION LETTER FOR MR MZIWAKHE NGWANE

INCORPORATED ASSOCIATION NOT FOR GAIN

SFF ASSOCIATION Reg.No. 1964/010277/08

151 FRANS CONRADIE DRIVE, PAROW, 7500
CAPE TOWN, SOUTH AFRICA
TEL +27 (021) 524 2700 : FAX +27 (021) 524 2719

23 January 2022

Our Ref: SFF **Application for Tariffs and Licences/Amendment of Licences**

Energy Regulator
Kulawula House,
526 Madiba Street,
Arcadia,
Pretoria

Dear Sir / Madam

AUTHORISATION LETTER

I Godfrey Moagi ID Number [redacted] here-by authorised Mziwakhe Ngwane ID Number [redacted] (**Capital Projects Executive**) to make declaration to the Energy Regulator (NERSA) for the applications of Licences and Tariffs on behalf of SFF.

Yours faithfully

Godfrey Moagi

Chief Executive Officer

DIRECTORS: Ms N. MAGUBANE (Chairperson), Mr M.G. MTHEMBU, Mr L.L. THEKISHO, Dr M.E. MAKGAE, Mr S.M. MAFANYA, Ms B. NABE, Mr S. THOLE, Mr M.G. MOAGI (Exe Director)
GROUP COMPANY SECRETARY: Mr A. HAFFEJEE

ANNEXURE D: COPIES OF MR MM NGWANE'S ID AND DRIVER'S LICENCE

CONFIDENTIAL IN ENTIRETY

ANNEXURE DD: ENVIRONMENTAL AUTHORISATION

ANNEXURE DD

environmental affairs

Department:
Environmental Affairs
REPUBLIC OF SOUTH AFRICA

Private Bag X 447· PRETORIA · 0001· Environment House · 473 Steve Biko Road, Arcadia · PRETORIA

DEA Reference: 14/12/16/3/3/2/1069
Enquiries: Ms Dakalo Netshiombo
Telephone: (012) 399 8877 **E-mail:** DNetshiombo@environment.gov.za

Mfano Nkutha
Strategic Fuel Fund (SFF) Association Incorporated Under Section 21 – Saldanha Tank Farm
PO Box 117
SALDANHA BAY
7395

Tel: (021) 524 2700
Cell: (082) 351 3322
E-mail: mfanon@strategicfuelfund.co.za

PER E-MAIL / MAIL

Dear Sir/ Madam

ENVIRONMENTAL AUTHORISATION IN TERMS OF THE NATIONAL ENVIRONMENTAL MANAGEMENT ACT, ACT NO. 107 OF 1998, GN R982, GN R983, GN R984 AND GN R985 AS AMENDED: FOR THE PROPOSED DEVELOPMENT OF AN LIQUID PETROLEUM GAS (LPG) IMPORT FACILITY, PIPELINE AND HANDLING FACILTIY IN THE PORT OF SALDANHA WITHIN SALDANHA BAY LOCAL MUNICIPALITY IN THE WESTERN CAPE PROVINCE

With reference to the above application, please be advised that the Department has decided to grant authorisation. The Environmental Authorisation (EA) and reasons for the decision are attached herewith.

In terms of Regulation 4(2) of the Environmental Impact Assessment Regulations, 2014, as amended (the EIA Regulations), you are instructed to notify all registered interested and affected parties, in writing and within 14 (fourteen) days of the date of the EA, of the Department's decision as well as the provisions regarding the submission of appeals that are contained in the Regulations.

In terms of the Promotion of Administrative Justice Act, Act No. 3 of 2000, you are entitled to the right to fair, lawful and reasonable administrative action; and to written reasons for administrative action that affects you negatively. Further your attention is drawn to the provisions of the Protection of Personal Information Act, Act No. 4 of 2013 which stipulates that the Department should conduct itself in a responsible manner when collecting, processing, storing and sharing an individual or another entity's personal information by holding the Department accountable should the Department abuses or compromises your personal information in any way.

Your attention is drawn to Chapter 2 of National Environmental Management Act, Act No. 107 of 1998 National Appeal Regulations published under Government Notice R993 in Government Gazette No. 38303 dated 08 December 2014 (National Appeal Regulations, 2014), which prescribe the appeal procedure to be followed. Kindly include a copy of this document (National Appeal Regulations, 2014) with the letter of notification to interested and affected parties in this matter.

MS

Should any person wish to lodge an appeal against this decision, he/she must submit the appeal to the appeal administrator, and a copy of the appeal to the applicant, any registered interested and affected party, and any organ of state with interest in the matter within 20 days from the date that the notification of the decision was sent to the registered interested and affected parties by the applicant; or the date that the notification of the decision was sent to the applicant by the Department, whichever is applicable.

Appeals must be submitted in writing in the prescribed form to:

The Director: Appeals and Legal Review of this Department at the below mentioned addresses.

By email: appealsdirectorate@environment.gov.za;

By hand: Environment House
473 Steve Biko
Arcadia
Pretoria
0083; or

By post: Private Bag X447
Pretoria
0001

Please note that in terms of Section 43(7) of the National Environmental Management Act, Act No. 107 of 1998, as amended, the lodging of an appeal will suspend the environmental authorisation or any provision or condition attached thereto. In the instance where an appeal is lodged, you may not commence with the activity until such time that the appeal is finalised.

To obtain the prescribed appeal form and for guidance on the submission of appeals, please visit the Department's website at https://www.environment.gov.za/documents/forms#legal_authorisations or request a copy of the documents at appealsdirectorate@environment.gov.za.

Yours faithfully

Mr Sabelo Malaza
Chief Director: Integrated Environmental Authorisations
Department of Environmental Affairs
Date: 05/11/2019

cc:	Lauren Abrahams	Eco Impact Legal Consulting (Pty) Ltd	Tel: (021) 671 1660	Email: admin@ecoimpact.co.za
	Zaahir Toefy	DEADP Management (Region 1)	Tel: (021) 483 5829	Email:Zaahir.toefy@westerncape.gov.za
	Municipal Manager	Saldanha Bay Local Municipality	Tel:(022) 701 7000	Email:mun@sbm.gov.za

M.S

environmental affairs
Department:
Environmental Affairs
REPUBLIC OF SOUTH AFRICA

Environmental Authorisation

In terms of regulation 25 of the Environmental Impact Assessment Regulations, 2014, as amended

The development of a Liquid Petroleum Gas (LPG) import facility, pipeline and handling facility in the Port of Saldanha within Saldanha Bay Local Municipality in the Western Cape Province

West Coast District Municipality

Authorisation register number:	*14/12/16/3/3/2/1069*
Last amended:	*First issue*
Holder of authorisation:	*Strategic Fuel Fund (SFF) Association Incorporated Under Section 21 – Saldanha Tank Farm*
Location of activity:	*Saldanha Bay Local Municipality; WESTERN CAPE PROVINCE:*

This environmental authorisation does not negate the holder of the authorisation's responsibility to comply with any other statutory requirements that may be applicable to the undertaking of the activity.

M.S

Decision

The Department is satisfied, on the basis of information available to it and subject to compliance with the conditions of this environmental authorisation, that the applicant should be authorised to undertake the activities specified below.

Non-compliance with a condition of this environmental authorisation may result in criminal prosecution or other actions provided for in the National Environmental Management Act, 1998 and the EIA regulations.

Details regarding the basis on which the Department reached this decision are set out in Annexure 1.

Activities authorised

By virtue of the powers conferred on it by the National Environmental Management Act, 1998 (Act No.107 of 1998) and the Environmental Impact Assessment Regulations, 2014 the Department hereby authorises

STRATEGIC FUEL FUND (SFF) ASSOCIATION INCORPORATED UNDER SECTION 21 – SALDANHA TANK FARM

with the following contact details –

Mfano Nkutha
Strategic Fuel Fund (SFF) Association Incorporated Under Section 21 – Saldanha Tank Farm
PO Box 117
SALDANHA BAY
7395

MS

Tel: (021) 524 2700

Cell: (082) 351 3322

E-mail: mfanon@strategicfuelfund.co.za

to undertake the following activities (hereafter referred to as "the activity") indicated in Listing Notice 1 (GN R. 327), Listing Notice 2 (GNR. 325) and Listing Notice 3 (GNR. 324), as amended:

GN R. 327 Activity 27: *The clearance of an area of 1 hectares or more, but less than 20 hectares of indigenous vegetation, except where such clearance of indigenous vegetation is required for-* *(i) the undertaking of a linear activity.*	The clearing of 3 ha of indigenous vegetation for the development of an LPG terminal, at the existing SFF facility.
GN R. 327 Activity 51: *The expansion and related operation of facilities for the storage, or storage and handling, of a dangerous good, where the capacity of such storage facility will be expanded by more than 80 cubic metres.*	The installation of an LPG terminal, at the existing SFF facility, with a total storage capacity of 8000MT.
GN R. 327 Activity 56: *The widening of a road by more than 6 metres, or the lengthening of a road by more than 1 kilometre-* *(i) where the existing reserve is wider than 13,5 meters; or* *(ii) where no reserve exists, where the existing road is wider than 8 metres; excluding where widening or lengthening occur inside urban areas.*	Construction of a 7.4m wide new bituminous access road which intersects the Road MR559 (to connect to the existing access road) and internal; road network of the LPG handling facility.
GN R. 327 Activity 67: *Phased activities for all activities-* *(ii) listed as activities 5, 7, 8(ii), 11, 13, 16, 27(i) or 27(ii) in Listing Notice 2 of 2014 or similarly listed in any of the previous NEMA notices, which commenced on or after the effective date of such previous NEMA Notices; where any phase of the activity was below a threshold but where a combination of the phases,*	The initial phase of the proposed development includes: • Construction of the LPG pipeline; • Modification of Jetty;

M.S

including expansions or extensions, will exceed a specified threshold.	• Vegetation Clearing for LPG handling facility; • Construction of mini-substation; • Construction of new access road and internal; road network of the LPG handling facility; • Fence around LPG handling facility ; • Construction and installation of two 4241 ton LPG mounded spherical tanks; • Construction of stores, ablutions, driver waiting area, gate house, loading gantry and weighbridges. • The expansion phase of the proposed development includes: - • Construction and installation of two 4241 Ton LPG mounded spherical tanks; • Additional weighbridges.
<u>GN R. 324 Activity 4:</u> *The development of a road wider than 4 metres with a reserve less than 13,5 metres.* *i. Western Cape* *ii. Areas outside urban areas;* *(aa) Areas containing indigenous vegetation;*	Construction of a 7.4m wide new bituminous access road which intersects the Road MR559 (to connect to the existing access road) and internal; road network of the LPG handling facility.

M.S

GN R. 324 Activity 12: *The clearance of an area of 300 square metres or more of indigenous vegetation except where such clearance of indigenous vegetation is required for maintenance purposes undertaken in accordance with a maintenance management plan.* *i. Western Cape* *i. Within any critically endangered or endangered ecosystem listed in terms of section 52 of the NEMBA or prior to the publication of such a list, within an area that has been identified as critically endangered in the National Spatial Biodiversity Assessment 2004;* *ii. Within critical biodiversity areas identified in bioregional plans;* *iii. Within the littoral active zone or 100 metres inland from high water mark of the sea or an estuarine functional zone, whichever distance is the greater, excluding where such removal will occur behind the development setback line on erven in urban areas;* *iv. On land, where, at the time of the coming into effect of this Notice or thereafter such land was zoned open space, conservation or had an equivalent zoning; or* *v. On land designated for protection or conservation purposes in an Environmental Management Framework adopted in the prescribed manner, or a Spatial Development Framework adopted by the MEC or Minister.*	Clearing of vegetation classified as Endangered in terms of NEMBA for the development of the LPG pipeline. Although only about 53% of the route (3100m) passes through Low or Medium sensitivity habitat where this will have only a Low to Medium negative impact, but the remainder passes through an existing disturbed servitude within High (0.6km) and Medium to High (0.1km) sensitivity habitat, where at least five plant Species of Conservation concern may be present in varying abundance, and where species diversity is fairly high.
GN R. 325 Activity 7: *The development and related operation of facilities or infrastructure for the bulk transportation of dangerous goods-* *(i) in gas form, outside an industrial complex, using pipelines, exceeding 1000 metres in length, with a throughput capacity of more than 700 tons per day;*	The development of an 8.3 km LPG (Liquid Petroleum Gas) pipeline, with a diameter of 12 inches (30 cm), which will run within an existing servitude from

M.S

(ii) in liquid form, outside an industrial complex, using pipelines, exceeding 1 000 metres in length, with a throughput capacity of more than 50 cubic metres per day; or *(iii) in solid form, outside an industrial complex, using funiculars or conveyors with a throughput capacity of more than 50 tons per day.*	the Jetty to the SFF Saldanha terminal site.

- as described in the final EIAr dated July 2019.

Erf 1038	C04600000000103800000
Erf 1185	C04600000000118500000

Starts	33°00'25.11"S	18°02'17.78"E
Middle	33°00'03.97"S	18°00'55.01"E
End	33°02'02.52"S	17°58'59.79"E
A	33°00'25.11"S	18°02'17.78"E
B	33°00'17.10"S	18°01'19.10"E
C	33°01'19.47"S	17°59'19.69"E
D	33°01'01.64"S	18°03'09.81"E
Centre	33°00'54.51"S	18°03'07.19"E

- for the development of a Liquid Petroleum Gas (LPG) import facility, pipeline and handling facility in the Port of Saldanha within Saldanha Bay Local Municipality in the Western Cape Province, hereafter referred to as "the site".

M.J

The LPG handling facility, pipeline and associated infrastructure would comprise of the following:

- LPG pipeline (approx. 8.3km);
- LPG Handling Facility (approx. 3ha):
  - Four 4241 ton spherical mounded LPG tanks;
  - Stores and ablutions;
  - Internal concrete road;
  - Mini-substation;
  - Four 60 ton weigh bridges;
  - New gravel internal road;
  - New asphalt access road;
  - Re-alignment and surfacing of existing access road;
  - Gate house and driver waiting area;
  - Fire water pipeline (to connect to existing infrastructure);
  - Water supply pipeline (to connect to existing infrastructure);
  - Sewer pipeline (to connect to existing infrastructure);
  - 2.2m high security fence.
- Modification of the existing jetty (this will be done in accordance with preferred layout):
  - Installation of mooring hooks on caissons 19 – 23;
  - Installation of a manifold for a flexible hose or a loading arm on caissons 18 – 19;
  - Installations of 3.3 x 6.5m fenders on caissons 17 – 21;
  - Installation of a concrete deck suspended above water on beams to span between caissons 18 and 19 (refer to deck options as indicated on the layout drawings); and
  - Installation of a gangway on caisson 18.

M.S

Conditions of this Environmental Authorisation

Scope of authorisation

1. The preferred alternatives for the proposed development of a Liquid Petroleum Gas (LPG) import facility, pipeline and handling facility in the Port of Saldanha within Saldanha Bay Local Municipality in the Western Cape Province is hereby approved as per the geographic coordinates indicated above.
2. Authorisation of the activity is subject to the conditions contained in this environmental authorisation, which form part of the environmental authorisation and are binding on the holder of the authorisation.
3. The holder of the authorisation is responsible for ensuring compliance with the conditions contained in this environmental authorisation. This includes any person acting on the holder's behalf, including but not limited to, an agent, servant, contractor, sub-contractor, employee, consultant or person rendering a service to the holder of the authorisation.
4. The activities authorised may only be carried out at the property as described above.
5. Any changes to, or deviations from, the project description set out in this environmental authorisation must be approved, in writing, by the Department before such changes or deviations may be effected. In assessing whether to grant such approval or not, the Department may request such information as it deems necessary to evaluate the significance and impacts of such changes or deviations and it may be necessary for the holder of the authorisation to apply for further environmental authorisation in terms of the regulations.
6. The holder of an environmental authorisation must apply for an amendment of the environmental authorisation with the competent authority for any alienation, transfer or change of ownership rights in the property on which the activity is to take place.
7. This activity must commence within a period of five (05) years from the date of issue of this environmental authorisation. If commencement of the activity does not occur within that period, the authorisation lapses and a new application for environmental authorisation must be made in order for the activity to be undertaken.

MS

Frequency and process of updating the EMPr

13. The EMPr must be updated where the findings of the environmental audit reports, contemplated in Condition 23 below, indicate insufficient mitigation of environmental impacts associated with the undertaking of the activity, or insufficient levels of compliance with the environmental authorisation or EMPr.
14. The updated EMPr must contain recommendations to rectify the shortcomings identified in the environmental audit report.
15. The updated EMPr must be submitted to the Department for approval together with the environmental audit report, as per Regulation 34 of GN R. 982. The updated EMPr must have been subjected to a public participation process, which process has been agreed to by the Department, prior to submission of the updated EMPr to the Department for approval.
16. In assessing whether to grant approval of an EMPr which has been updated as a result of an audit, the Department will consider the processes prescribed in Regulation 35 of GN R.982. Prior to approving an amended EMPr, the Department may request such amendments to the EMPr as it deems appropriate to ensure that the EMPr sufficiently provides for avoidance, management and mitigation of environmental impacts associated with the undertaking of the activity.
17. The holder of the authorisation may apply for an amendment of an EMPr, if such amendment is required before an audit is required. The holder must notify the Department of its intention to amend the EMPr at least 60 days prior to submitting such amendments to the EMPr to the Department for approval. In assessing whether to grant such approval or not, the Department will consider the processes and requirements prescribed in Regulation 37 of GN R. 982.

Monitoring

18. The holder of the authorisation must appoint an experienced independent Environmental Control Officer (ECO) for the construction phase of the development that will have the responsibility to ensure that the mitigation/rehabilitation measures and recommendations referred to in this environmental authorisation are implemented and to ensure compliance with the provisions of the approved EMPr.
    18.1. The ECO must be appointed before commencement of any authorised activities.

M.S

18.2. Once appointed, the name and contact details of the ECO must be submitted to the Director: Compliance Monitoring of the Department at Directorcompliance@environment.gov.za.

18.3. The ECO must keep record of all activities on site, problems identified, transgressions noted and a schedule of tasks undertaken by the ECO.

18.4. The ECO must remain employed until all rehabilitation measures, as required for implementation due to construction damage, are completed and the site is ready for operation.

Recording and reporting to the Department

19. All documentation e.g. audit/monitoring/compliance reports and notifications, required to be submitted to the Department in terms of this environmental authorisation, must be submitted to the Director: Compliance Monitoring of the Department at Directorcompliance@environment.gov.za.

20. The holder of the environmental authorisation must, for the period during which the environmental authorisation and EMPr remain valid, ensure that project compliance with the conditions of the environmental authorisation and the EMPr are audited, and that the audit reports are submitted to the Director: Compliance Monitoring of the Department at Directorcompliance@environment.gov.za.

21. The frequency of auditing and of submission of the environmental audit reports must be as per the frequency indicated in the EMPr, taking into account the processes for such auditing as prescribed in Regulation 34 of GN R. 982.

22. The holder of the authorisation must, in addition, submit an environmental audit report to the Department within 30 days of completion of the construction phase (i.e. within 30 days of site handover) and a final environmental audit report within 30 days of completion of rehabilitation activities.

23. The environmental audit reports must be compiled in accordance with appendix 7 of the EIA Regulations, 2014 and must indicate the date of the audit, the name of the auditor and the outcome of the audit in terms of compliance with the environmental authorisation conditions as well as the requirements of the approved EMPr.

24. Records relating to monitoring and auditing must be kept on site and made available for inspection to any relevant and competent authority in respect of this development.

M.S

Notification to authorities

25. A written notification of commencement must be given to the Department no later than fourteen (14) days prior to the commencement of the activity. Commencement for the purposes of this condition includes site preparation. The notice must include a date on which it is anticipated that the activity will commence, as well as a reference number.

Operation of the activity

26. A written notification of operation must be given to the Department no later than fourteen (14) days prior to the commencement of the activity operational phase.

Site closure and decommissioning

27. Should the activity ever cease or become redundant, the holder of the authorisation must undertake the required actions as prescribed by legislation at the time and comply with all relevant legal requirements administered by any relevant and competent authority at that time.

Specific conditions

28. No activities which require a water use license must be allowed to encroach into a water resource without a water use authorisation being in place from the Department of Water and Sanitation.
29. Should any archaeological or cultural heritage resources, including human remains / graves, as defined and protected under the National Heritage Resources Act, 1999, be identified during the construction phase, construction activities within the vicinity of the findings must immediately cease and be reported to the relevant heritage resources authority and should human remains be found on site.
30. The footprint of the development must be limited to the areas required for actual construction works and operational activities.
31. Should abnormal loads have to be transported by road to the site, a permit must be obtained from the relevant authorities.

MS

32. Necessary permits must be obtained from the Department of Forestry and Fisheries for any removal of trees protected under the National Forest Act of 1998.

33. Any solid waste, which will not be recycled, must be disposed of at a landfill licensed in terms of section 20 (b) of the National Environment Management Waste Act, 2008 (Act No.59 of 2008).

General

34. A copy of this environmental authorisation, the audit and compliance monitoring reports, and the approved EMPr, must be made available for inspection and copying-
    - 34.1. at the site of the authorised activity;
    - 34.2. to anyone on request; and
    - 34.3. where the holder of the environmental authorisation has a website, on such publicly accessible website.

35. National government, provincial government, local authorities or committees appointed in terms of the conditions of this authorisation or any other public authority shall not be held responsible for any damages or losses suffered by the holder of the authorisation or his/her successor in title in any instance where construction or operation subsequent to construction be temporarily or permanently stopped for reasons of non-compliance by the holder of the authorisation with the conditions of authorisation as set out in this document or any other subsequent document emanating from these conditions of authorisation.

Date of environmental authorisation: 05/11/2012

Mr Sabelo Maleza

Chief Director: Integrated Environmental Authorisations

Department of Environmental Affairs

MS

Annexure 1: Reasons for Decision

1. Information considered in making the decision

In reaching its decision, the Department took, *inter alia*, the following into consideration -

a) The information contained in the final EIAr dated July 2019;
b) The comments received from Interested and Affected parties as included in the final EIAr dated July 2019;
c) Mitigation measures as proposed in the final EIAr dated July 2019 and the EMPr;
d) The information contained in the specialist studies contained within Appendix E of the final EIAr; and
e) The objectives and requirements of relevant legislation, policies and guidelines, including section 2 of the National Environmental Management Act, 1998 (Act No.107 of 1998).

2. Key factors considered in making the decision

All information presented to the Department was taken into account in the Department's consideration of the application. A summary of the issues which, in the Department's view, were of the most significance is set out below.

a) The findings of the specialist studies conducted and their recommended mitigation measures.
b) The aims to support efforts to realize the objectives of the National Development Plan, Integrated Resource Plan (IRP 2010), Industrial Policy Action Plan and the transition to low carbon economy (Green Economy).
c) The final EIAr dated July 2019 identified all relevant environmental legislations and guidelines that have been considered in the preparation of the EIAr.
d) The methodology used in assessing the potential impacts identified in the final EIAr dated July 2019 and the specialist studies have been adequately indicated.
e) A sufficient public participation process was undertaken and the applicant has satisfied the minimum requirements as prescribed in the EIA Regulations, 2014 for public involvement.

3. Findings

After consideration of the information and factors listed above, the Department made the following findings -

a) The identification and assessment of impacts are detailed in the final EIAr dated July 2019 and sufficient assessment of the key identified issues and impacts have been completed.

b) The procedure followed for impact assessment is adequate for the decision-making process.

c) The proposed mitigation of impacts identified and assessed adequately curtails the identified impacts.

d) The EMPr proposed mitigation measures for the pre-construction, construction and rehabilitation phases of the development and were included in the EIAr. The mitigation measures will be implemented to manage the identified environmental impacts during the construction phase.

In view of the above, the Department is satisfied that, subject to compliance with the conditions contained in the environmental authorisation, the authorised activities will not conflict with the general objectives of integrated environmental management laid down in Chapter 5 of the National Environmental Management Act, 1998 and that any potentially detrimental environmental impacts resulting from the authorised activities can be mitigated to acceptable levels. The environmental authorisation is accordingly granted.

MJ

Annexure 2: Locality Map

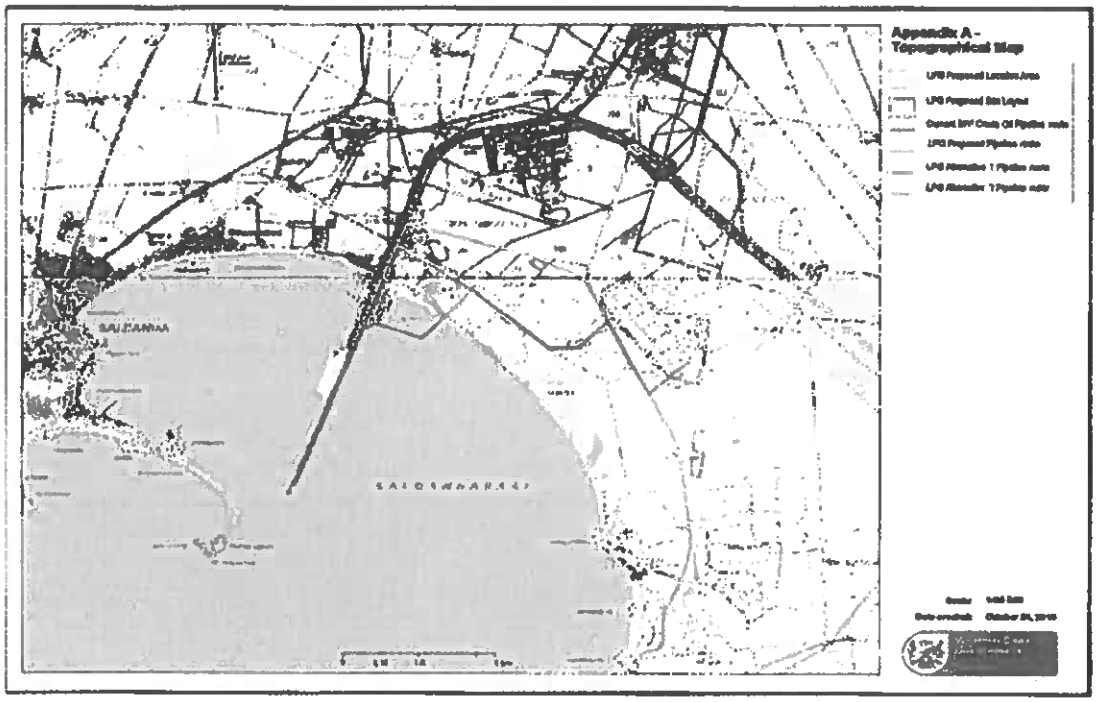

M.S

ANNEXURE DD1: PROJECT TEAM MEMBER'S QUALIFICATIONS

ANNEXURE DD1

Project Team Member's Qualifications

Name	Qualifications and memberships	Experience
David Strauss	B. Engineering (Pretoria, 1988)	35 years experience.
	MBA (Northwest University, 1988)	Maintenance Manager;
	Registered as Professional Engineer with ECSA	Process Development;
	Member of South African Institute of Mechanical Engineers	Mechanical Design and Project Management in a variety of industries;
		Fuel from coal;
		Aluminium Production;
		Steel Mill;
		Precast Concrete;
Name	**Qualifications and memberships**	**Experience**
Tienie Steven	BSc Civil Engineering (Engineering University of Natal Durban - 1967)	Pr Eng and MSAICE 35 years in the Oil Industry
Name	**Qualifications and memberships**	**Experience**
Mkhuseli Wana	Chem. Engineering (PENETECH)	Oil Industry 30 Years
	Marketing (PENTECH)	Refinery Operations,
	Business Administration (UCT)	Refinery Economist and Planning,
		Supply Trading & Logistics,
		Shipping & Chartering,
		Project Management

ANNEXURE E: TNPA AND SFF TERMINAL OPERATOR AGREEMENT

CONFIDENTIAL IN ENTIRETY

ANNEXURE EE: LEGISLATION AND STANDARDS

ANNEXURE EE

Legislation and Standards

1. Relevant and latest legislation

Table 1.1: List of most relevant and latest legislation

Legislation:	Name and Description:
Act No. 60 of 2003	Petroleum Pipelines Act
Act No. 85 of 1993	The Occupational Health and Safety Act, "the OHS Act"
Act No. 107 of 1998	The National Environmental Management Act
	Major Hazardous Installation Regulations made in terms of the OHS Act, including MHI Regulations, Pressure Equipment Regulations and similar
Act No. 107 of 1998	National Environmental Management Act
Act No. 73 of 1989	The Environmental Conservation Act
Act No. 12 of 2005	National Ports Act
Act No. 102 of 1980	National Key Points Act
Act No. 120 of 1977	Petroleum Products Act

2. Applicable technical standards and codes

Table 1.2: List of most relevant technical standards and codes

Standard:	Name and Description:
API 5L	Specification for line pipe
API Standard 2510	Design and Construction of LPG installations (at marine and pipeline terminals)
ASME B31.3	Code for pressure piping – Process Piping
ASME B31.4	Code for Pipeline Transportation Systems for Liquids and Slurries
ISGOTT	International Safety Guide for Oil Tankers and Terminals (6th Edition)
SANS 61508	Functional safety – Functional safety of electrical/electronic/programmable electronic safety-related systems
SANS 61511	Functional safety – Safety instrumented systems for the process industry sector
SANS 10086-1	The installation and maintenance of equipment used in explosive atmospheres, Part 1: Installation including surface installation on mines
SANS 10089-1	The petroleum industry, Part 1: Storage and distribution of petroleum products in above-ground bulk installations
SANS 10089-2	The petroleum industry, Part 2: Electrical and other installations in the distribution and marketing sector
SANS 10108	The classification of hazardous locations and the selection of apparatus for use in such locations
SANS 1200	Standardized specifications for civil engineering construction
SANS 15589-1	Petroleum and natural gas industries – Cathodic protection of pipeline transportation systems, Part 1: On-land pipelines

ANNEXURE EE (Continue)	
SANS 347	Categorization and conformity assessment criteria for all pressure equipment
SANS 60079-10-1	Explosive atmospheres, Part 10: Classification of areas – explosive gas atmospheres
NFPA 58	Liquefied Petroleum Gas (LPG) Code

ANNEXURE E1: SHARE CERTIFICATE

CONFIDENTIAL IN ENTIRETY

ANNEXURE FF: NATIONAL KEY POINT CERTIFICATE

ANNEXURE FF

DECLARATION CERTIFICATE

NATIONAL KEY POINTS ACT: DECLARATION OF PLACE OR AREA AS A NATIONAL KEY POINT

In terms of the powers conferred under Section 2(1) of the National Key Points Act, Act 102 of 1980, which powers have been duly delegated to me in full, I hereby declare your place/area, as described below, a National Key Point (NKP).

Name of installation: SFF Oil JETTY.

- Situated at: Skurwerug Site,
  Saldanha, 7395
- Registered at the National Key Points Section as NKP No: 0136400

Your attention is drawn specifically to the provisions of Sections 3 and 8 of the National Key Points Act. In terms of Section 2(1) of the National Key Points Act, Act 102 of 1980, you are the owner of a declared National Key Point. The safeguarding of a National Key Point comprises the concept of both security and protection. These are defined as:

- Security. The measures applied by the owner of the Key Point at own cost and to the satisfaction of the Minister to prevent or counter subversion, espionage, and sabotage and/or to apply emergency measures in a situation of emergency and disaster;

- Protection. Means measures applied by the South African Police Service, Division Protection and Security Services, in or around a Strategic Installation to prevent or counter any incursion or attack on or threat of the Key Point.

Your Protecting Unit is the local SAPS Station. The total safeguarding of a National Key Point comprises not only the security measures which you as owner are obliged to implement in terms of section 3(1) of the National Key Points Act, but also the effective protection of the NKP which must be implemented by the protecting unit. It is therefore of the utmost importance that either you, or a person appointed by you, liaise with the protecting unit of this National Key Point and the Provincial NKP Officer to activate a Joint Planning Committee (JPC) for this National Key Point in order to draw up a joint plan to counter an incident.

In terms of Section 24D of the Income Tax Act, you can submit a claim for tax deduction in respect of expenditure incurred on security measures implemented at your National Key Points. Further particulars in this regard can be obtained from the Provincial NKP Officer.

It is trusted that you will implement your security obligations as defined in Section 3(1) of the National Key Points Act, Act 102 of 1980, at your National Key Point.

The NKP Directive, as issued by the Minister, is included herewith. This directive contains all the information which you will need with reference to the administration and safeguarding of your NKP. Please study it carefully.

If the circumstances of your NKP should change to such a degree that its status as a NKP is affected, you must please inform the NKP Section so that a re-evaluation can be carried out.

Please acknowledge receipt by completing and returning the attached letter promptly.

Yours faithfully.

MINISTER
NPT NHLEKO

Date: 16/08/2014

Enclosure 1: Acknowledgment of this notice
2: NKP Directive

ANNEXURE GG: MARITIME SECURITY PLAN

CONFIDENTIAL IN ENTIRETY

ANNEXURE HH: PROJECT SCHEDULE

CONFIDENTIAL IN ENTIRETY

ANNEXURE J: SFF AUDITED FINANCIAL STATEMENTS

CONFIDENTIAL IN ENTIRETY

ANNEXURE K1: KANTEY AND TEMPLER REPORT

CONFIDENTIAL IN ENTIRETY

ANNEXURE K2: PRDW – PROJECT COMPLETION REPORT

CONFIDENTIAL IN ENTIRETY

ANNEXURE K3: SFF LPG PRE-FEASIBILITY DESIGN

CONFIDENTIAL IN ENTIRETY

ANNEXURE K4: PRE-FEASILBILITY DESIGN HAZID STUDY

CONFIDENTIAL IN ENTIRETY

ANNEXURE S1: DEPARTMENT OF TRANSPORT DIRECTIVE

MINISTRY: TRANSPORT
REPUBLIC OF SOUTH AFRICA
Private Bag X193, Pretoria, 0001, Tel: (012) 309 3131, Fax: (012) 328 3194
Private Bag X9129, Cape Town, 8000, Tel: (021) 465 7260/4, Fax: (021) 461 6845

DIRECTIVE IN TERMS OF SECTION79 OF THE NATIONAL PORTS ACT 12 OF 2005 FOR TRANSNET NATIONAL PORTS AUTHORITY (TNPA) TO AMEND THE CURRENT TERMINAL LICENSE ISSUED TO THE STRATEGIC FUEL FUND (SFF) TO INCLUDE, IN PARTICULAR, THE HANDLING OF LIQUEFIED PETROLEUM GAS (LPG)

I, Dipuo Peters, in my capacity as the Minister of Transport, hereby direct Transnet National Ports Authority (TNPA) in terms of Section 79 (1) read with Sections 11 (4) and 57 (1) of the National Ports Act 12 of 2005 to, without going through a public process as required in terms of Section 56 of the Ports Act, amend the current Strategic Fuel Fund (SFF) terminal license to include, in particular, the handling of Liquefied Petroleum Gas (LPG) at the Port of Saldanha Bay.

This Directive is issued subject to the following conditions:

1. The current lease of SFF include LPG and be extended with a minimum of 25 years as of the 31 December 2025 upon receipt of concurrence from Cabinet;
2. SFF shall reimburse all the monies that TNPA would have received had TNPA undertaken the public process as required under Section 56 of the Act as this is the condition as set out in Section 79 (4) (a) and (b) as the State cannot carry a financial obligation that is of no benefit to it;
3. The award of this Directive does not replace the commercial relationship and agreement that SFF and TNPA must enter into, to effect this Directive. TNPA is entitled to charge all applicable fees.

This Directive will take place after all necessary commercial arrangements have been concluded by the affected parties to this relationship.

Signed:

Dipuo Peters, MP

Minister of Transport

Date: 11/01/2017

ANNEXURE S2: COMPANY REGISTRATION DOCUMENTS

ANNEXURE 'C'

REPUBLIC OF SOUTH AFRICA

REPUBLIEK VAN SUID-AFRIKA

64/00002/08

No.
21/64/2

Certificate of Incorporation
Sertifikaat van Inkorporasie

I hereby Certify that
Ek Sertifiseer hierby dat

ORIGINAL
INDISTINCT
OORSPRONKLIKE
ONDUIDELIK

S.P.P. ASSOCIATION

was this day incorporated under the Companies Act, 1926 (*Act No.* 46 *of* 1926)
vandag geinkorporeer is ingevolge die Maatskappywet, 1926 (*Wet No.* 46 *van*

and that the Company is LIMITED
1926), *en dat die Maatskappy BEPERK is*

Signed at PRETORIA
Geteken te PRETORIA

this *hede die* EIGHTEENTH *day of* *dag van* JUNE,

One thousand Nine hundred and
Eenduisend Negehonderd SIXTY-FOUR.

P.C. McLACHLAN.
for *Registrar of Companies*
namens *Registrateur van Maatskappye*

MOI FOR A NON-PROFIT COMPANY WITH MEMBERS
SUBSIDIARIES OF CEF (SOC) LTD

REPUBLIC OF SOUTH AFRICA

COMPANIES ACT 71, OF 2008, AS AMENDED

MEMORANDUM OF INCORPORATION

OF

SFF ASSOCIATION NPC

REGISTRATION NUMBER

1964/010277/08

INTERPRETATION

In the interpretation of this Memorandum of Incorporation (**"Memorandum"**) and unless contrary to or excluded by the subject or context, any word herein signifying:

- the singular shall include the plural and vice versa;
- the masculine shall include the feminine and vice versa.

Furthermore, any word herein which is defined in the Companies Act and the PFMA, and is not defined in this Memorandum shall bear that statutory meaning in this Memorandum. Any word, phrase or sentence herein which is not defined in the PFMA, the Companies Act or this Memorandum shall bear its usual meaning.

In this Memorandum, unless the context otherwise indicates-

(a) "the Board" means the board of Directors of the Company, as appointed in terms of this Memorandum from time to time;

(b) "the CEF Act" means the Central Energy Fund Act, 38 of 1977, as amended or replaced from time to time;

(c) "Central Energy Fund" means the Central Energy Fund referred to in section 1 of the CEF Act;

(d) "CEF " means CEF (SOC) Limited, registration number 1976/001441/30, a state owned company incorporated in accordance with the laws of the Republic of South Africa;

(e) "CEF Group" means collectively, CEF and its subsidiaries, Associates and any funds managed by CEF;

(f) "Chairman" means the chairman of the Board as appointed in terms of this Memorandum from time to time, who shall, unless otherwise agreed by CEF, be a non-executive director;

(g) "the Companies Act" means the Companies Act, 71 of 2008 as amended or replaced from time to time;

(h) "Company" means SFF Association, registration number 1964/010277/08 , a non-profit company incorporated in accordance with the laws of the Republic of South Africa;

(i) "Corporate Plan" means the strategic, financial and restructuring plan developed or to be developed by the company as per the PFMA.

(j) "Directors" means the Directors of the Company as appointed in terms of this Memorandum from time to time;

(k) "Electronic communication" means any form of electronic transmission, approved by the Directors, utilised to issue, present, deliver, serve and record inter alia circulars, statutory notices, financial statements, auditors reports, notifications;

(l) "Entrenched Provisions" means the limitations on the Board's authority, which apply to the Board and the Company, and are set out in Part C of Schedule 3;

(m) "Levels of Authority Matrix" means the matrix setting out the levels of authority applicable to the Board and the Company;

(n) "Memorandum" means this Memorandum of Incorporation, as may be amended from time to time;

(o) "Parent Shareholders Compact" means any agreement which may be in existence between CEF and its shareholder, from time to time;

(p) "PFMA" means the Public Finance Management Act, 1 of 1999, as amended or replaced from time to time;

(q) "Protocol" means the Protocol on Corporate Governance in the Public Sector (Protocol 1997) which encompasses not only the application to State Owned Enterprises of the recommendations of the King Report on Corporate Governance, but also the system by which State Owned Enterprises are to be supervised and their performance monitored by the Government of the Republic of South Africa;

(r) "Members" means the those persons registered in the Company's Membership Register as such, from time to time;

(s) "Members' Compact" means the performance agreement that may be concluded between CEF and the Company (as its Member), as may be required by the Parent Shareholder Compact;

(t) "Membership" means registration in the Membership Register of the Company;

(u) "Membership Register" means the register of Members established or maintained by the Company in terms of section 24(4)(a) of the Companies Act;

(v) "Statutes" means collectively, the PFMA, the CEF Act and any other legislation that may apply in respect of the Company from time to time (other than the Companies Act);

(w) "Subsidiary" means a company is:

(a) A subsidiary of another juristic person if that juristic person, one or more other subsidiaries of that juristic person, or one or more nominees of that juristic person or any of its subsidiaries, alone or in any combination -:

i. Is or are directly or indirectly able to exercise, or control the exercise of, a majority of the general voting rights associated with issued securities of that company, whether pursuant to a shareholder agreement or otherwise; or

ii. Has or have the right to appoint or elect, or control the appointment or election of, Directors of that company who control a majority of the votes at a meeting of the board, or

(b) A wholly-owned subsidiary of another juristic person if all of the general voting rights associated with issued securities of the company are held or controlled, alone or in any combination, by persons contemplated in paragraph (a).

(x) "Treasury Regulations" the treasury regulations, enacted in terms of the PFMA;

(y) a reference to a section by number refers to the corresponding section of the Companies Act;

(z) a reference to an article by number refers to the articles in this Memorandum;

(aa) a reference to "amended" in this Memorandum, refers to a provision of the type contemplated in section 15(2)(a); and

(bb) the Schedules attached to this Memorandum are part of the Memorandum.

Table of Contents

Page No

PRELIMINARY

a) If the provisions of this Memorandum are in conflict with any provisions of the Statutes, the provisions of the Statutes shall prevail and the provisions of this Memorandum shall be read in all respects subject to the Statutes.

b) In the case of an irreconcilable conflict between the PFMA and the Companies Act as a result of this Memorandum, the provisions of the PFMA will prevail.

c) Notwithstanding the omission from this Memorandum of any provision to that effect, the Company may do anything which the law including the Companies Act and the Statutes empower a company to do as if so authorised by this Memorandum.

1. NAME

The name of the Company is SFF Association.

2. MAIN BUSINESS

3. The main business which the Company is to carry on the business of promoting, conducting, establishing, facilitating, guiding and assisting, by the establishment of a fund or funds and/or in any other manner whatsoever, the location, procurement, storage, production and/or exploitation of fuels, materials, materials, products and commodities which are or may become of strategic importance to the Republic of South Africa, not for gain but solely in the communal interests of the general public, and to perform any other acts towards this end.

4. MAIN OBJECT

The main object of the Company is:

To carry on the business of promoting, conducting, establishing, facilitating, guiding and assisting, by the establishment of a fund or funds and/or in any other manner whatsoever, the location, procurement, storage, production and/or exploitation of fuels, materials, materials, products and commodities which are or may become of strategic importance to the Republic of South Africa, not for gain but solely in the communal interests of the general public, and to perform any other acts towards this end.

There shall be included in the capacity of the Association unlimited objects ancillary to the aforesaid main object.

The pursuance of all or any of the above objects shall be in accordance with the provisions of the Statutes.

5. CONDITIONS

There are no special conditions which apply to the Company.

ARTICLE 1 – INCORPORATION AND NATURE OF THE COMPANY

1.1 Incorporation

(1) The Company is a Subsidiary of CEF, (a "public entity" as defined in the PFMA) and is incorporated as a non-profit company with Members, as defined in the Companies Act.

(2) The Company is incorporated in accordance with and governed by:

a) the unalterable provisions of the Companies Act that are applicable to non-profit companies (subject to any higher standards, greater restrictions, longer periods of time or more onerous requirements set out in this Memorandum in accordance with section 15(2)(a)(iii));

b) the alterable provisions of the Companies Act that are applicable to non-profit companies (subject to any negation, limitation, qualification, extension, or other alteration set out in this Memorandum in accordance with section 1, read with section 15(2)(a)(ii));

c) the provisions of this Memorandum, including the Entrenched Provisions, (subject to and in accordance with section 15(2); and

(3) The Company shall:

a) be operated and controlled; and

b) conduct its business,

subject to the provisions of the PFMA, the Companies Act, this Memorandum, the Parent Shareholders Compact, the Members Compact and any other agreement that may regulate the Company and its Members from time to time.

1.2 Powers of the Company

(1) The Company is not subject to any provisions contemplated in section 15(2) (b) or (c), which relates to the special conditions and the amendments thereof, and the restrictions on the amendment of this Memorandum.

(2) The legal powers and capacity of the Company are not subject to any restrictions, limitations or qualifications, as contemplated in section 19(1) (b) (ii).

1.3 Memorandum of Incorporation and Company rules

(1) This Memorandum may be altered or amended only in the manner set out in sections 16, 17 or 152(6) (b).

(2) The Board shall not have the authority to make incidental rules relating to the governance of the Company in respect of matters that are not addressed by the Companies Act or the Memorandum, as contemplated in section 15(3) to (5).

(3) The Company must publish a notice of any alteration of the Memorandum made in terms of section 17(1) relating to alteration to correct a patent error in spelling, punctuation, reference, grammar or similar defect on the face of the document by delivering a copy of those rules to the Member at its registered address recorded in the Company's securities register by Electronic communication or hand delivery.

ARTICLE 2 – MEMBERS

2.1 Members of the Company

As contemplated in Item 4(1) of Schedule 1 of the Companies Act, the Company has a Member, who is a voting member and may vote in any matters to be decided by the members of a company. The terms and conditions of Membership are as set out in Part A of Schedule 2 to this Memorandum.

2.2 Members' authority to act

If, at any time, the Member is also a director of the Company, as contemplated in section 57(4), the authority of the Member to act without notice or compliance with any other internal formalities, as set out in that section is limited or restricted to the extent set out in Part B of Schedule 2.

2.3 Members' right to information

In addition to the rights to access information as set out in section 26(1), the Member has additional rights to information as set out in Part C of Schedule 2.

2.4 Representation by concurrent proxies

The right of the Member to appoint 2 or more persons concurrently as proxies, as set out in section 58(3) (a), is not limited, restricted or varied by this Memorandum.

2.5 Authority of proxy to delegate

The authority of the Member's proxy to delegate the proxy's powers to another person, as set out in section 58(3) (b), is not limited or restricted by this Memorandum.

2.6 Requirement to deliver proxy instrument to the Company

The requirement that a Member must deliver to the Company a copy of the instrument appointing a proxy before that proxy may exercise the Member's rights at a Members' meeting, as set out in section 58(3)(c) is not varied by this Memorandum.

2.7 Deliberative authority of proxy

The authority of a Member's proxy to decide without direction from the Member whether to exercise or abstain from exercising any voting right of the Member, as set out in section 58(7), is not limited or restricted by this Memorandum.

ARTICLE 3 – MEMBERS' MEETINGS

3.1 Right to call meeting

The Board or CEF may, in terms of section 61, call a Members' meeting at any time.

3.2 Members' right to requisition a meeting

The right of Members to requisition a meeting, as set out in section 61(3), may be exercised by the holders of at least 25% of the voting rights entitled to be exercised in relation to the matter to be considered at the meeting, as provided for in that section.

3.3 Location of Members' meetings

The authority of the Board to determine the location of any Members' meeting and the authority of the Company to hold any such meeting in the Republic of South Africa or in any foreign country, as set out in section 61(9), is not limited or restricted by this Memorandum.

3.4 Notice of Members' meetings

The minimum number of days for the Company to deliver a notice of a Members' meeting to the Member as required by section 62 is 15 business days before the meeting is to begin as provided for in section 62(1)(a).

3.5 Electronic participation in Members' meetings

(1) Every Member's meeting must be reasonably accessible within the Republic of South Africa for electronic participation irrespective of where the meeting is held.

(2) The authority of the Company to conduct a meeting entirely by Electronic communication or to provide for participation in a meeting by Electronic communication as set out in section 63 is not limited or restricted by this Memorandum.

4.1 Quorum for Members' meetings

(1) The quorum requirement for a Members' meeting to begin or for a matter to be considered is 25% of all of the voting rights as set out in section 64(1), without variation

(2) The time periods allowed for the beginning and postponement or cancellation of the meeting in terms of section 64(4) and (5) apply to the Company without variation.

(3) The authority of a meeting to continue to consider a matter, as set out in section 64(9) is not limited or restricted by this Memorandum.

3.6 Adjournment of Members' meetings

The maximum period allowable for an adjournment of a Members' meeting is the earlier of 60 business days after the date on which adjournment occurred or 120 business days after the record date determined in accordance with section 59, as set out in section 64(13), without variation.

3.7 Members' resolutions

(1) The tabling and passing of Members' resolutions will be carried out in accordance with the provisions of section 65.

(2) For an ordinary resolution to be adopted, it must be supported by at least 50% of the Members who voted on the resolution, as provided in section 65(7).

(3) For a special resolution to be adopted, it must be supported by at least 75% of the Members who voted on the resolution, as provided in section 65(9).

(4) A special resolution is not required for a matter to be determined by the Company, except for the matters set out in section 65(11) or elsewhere in this Memorandum.

3.8 Annual General Meeting

(1) The Company must convene an annual general meeting (**"AGM"**) once per calendar year but no more than 15 months after the date of the previous AGM.

(2) The AGM shall, amongst others, consider the:

a) Directors' report;

b) audited financial statement for the immediately preceding financial year;

c) audit committee report;

d) election of Directors to the Board, to the extent required for that particular year by the provisions of this MOI;

e) appointment of an auditor for the ensuing financial year;

f) approval of the non-executive Directors' remuneration; and

g) appointment of an audit committee, if required.

3.9 Chairman

The Chairman shall preside as chairman at every general meeting of the Company. If there is no such Chairman, or he is not present within 15 minutes after the time appointed for holding the meeting, or is unwilling to act as chairman, the Member shall elect a person to be chairman of such general meeting.

ARTICLE 4 – DIRECTORS AND OFFICERS

4.1 Composition of the Board

(1) The Board shall comprise of not less than four (4) and no more than nine (9)] Directors (who shall be appointed by the Members and the majority of whom must

be non-executive Directors), in addition to the minimum number of Directors necessary to satisfy any committee requirements of the Statutes, the Companies Act and/or this Memorandum.

(2) The Board shall, upon consultation with the Members, appoint the chief executive officer of the Company (who shall at all times be a director and shall report to the Board), as well as any other executive Directors of the Company.

(3) All Directors, including the Chairman, shall be appointed for a term not exceeding three years.

(4) Notwithstanding the above provisions, Directors shall be appointed for no more than two consecutive terms, provided that in exceptional circumstances (as determined by the Members by special resolution); a director may be appointed for a maximum of three consecutive terms.

(5) In addition to satisfying the qualification and eligibility requirements set out in section 69, to become or remain a director or a prescribed officer of the Company, a person must satisfy the additional eligibility requirements and qualifications set out in Part A of Schedule 3 of this Memorandum.

(6) The Members shall have the power to remove a director from office by an ordinary resolution at a Members' meeting, and that director shall be given the same notice of the resolution as the Member.

(7) The authority of the Board to fill any vacancy on the Board on a temporary basis, as set out in section 68(3) is limited or restricted to the extent set out in Part B of Schedule 3.

(8) An *ex officio* or executive director shall cease to be a director upon ceasing to hold such office.

4.2 Functions of the Board

(1) The Board shall be responsible for all matters relating to the Company not otherwise reserved to the Members, provided that CEF shall have the power to continually monitor the performance of the Board and the Company, in line with the Board's policy.

(2) The Board shall at all times comply with the Entrenched Provisions.

(3) The Board, as the accounting authority of the Company, must, *inter alia*:

(a) comply with the Corporate Plan and give effect to such plan in order to achieve the objectives of the Company and the CEF Group;

(b) agree on a corporate objective statement of the Company, which statement shall be a public document;

(c) compile six monthly confidential reports (or quarterly reports, as agreed from time to time with CEF) setting out the progress against, and in changes to, the Corporate Plan;

(d) compile and provide CEF with a quarterly report, to the level and standard required by CEF, including key issues dealt with by the Board in such quarter, in addition to the annual report to be submitted to CEF.

(e) provide guidance to the chief executive officer and personnel of the Company concerning the exercise of the functions of the Company;

(f) notify CEF immediately of any matter that may prevent or materially affect the achievement of the objects or financial targets of the Company; and

(g) generally, refer to CEF any matters that may adversely affect the functioning of the Company.

4.3 Authority of the Board

(1) The authority of the Board to manage and direct the business and affairs of the Company, as set out in section 66(1) is limited or restricted to the extent set out in Part C of Schedule 3.

(2) To the extent that some of the Company's business and related activities have a political sensitivity, the Company shall not (and the Board shall not authorise) enter into investments or transactions outside the borders of the Republic of South Africa without consultation with CEF.

4.4 Board Meetings

(1) The Board shall meet at least once a quarter.

(2) Matters that arise at a meeting shall be determined by a majority of votes of the Directors present, and in the event of an equality of votes, the Chairman shall have no second or casting vote.

(3) The authority of the Board to consider a matter other than at a meeting, as set out in section 74, is limited or restricted to the extent set out in Part D of Schedule 3.

(4) The right of the Directors to requisition a meeting of the Board, as set out in section 73(1), may be exercised by at least one director.

(5) The authority of the Board to conduct a meeting entirely by Electronic communication, or to provide for participation in a meeting by electronic communication, as set out in section 73(3) is not limited or restricted by this Memorandum.

(6) The authority of the Board to determine the manner and form of providing notice of its meetings, as set out in section 73(4) is not limited or restricted by this Memorandum.

(7) The authority of the Board to proceed with a meeting despite a failure or defect in giving notice of the meeting, as set out in section 73(5) is not limited or restricted by this Memorandum.

(8) The quorum necessary for the transaction of business of the Directors shall be no fewer than 3 (three) Directors and such meeting shall comply without any variation with section 73(5) on other matters.

4.5 Directors compensation and financial assistance

(1) The authority of the Company to pay remuneration to the Company's Directors, in accordance with a special resolution approved by the Members within the previous two years, as set out in section 66(9) and (10), is limited or restricted to the extent set out in Part E of Schedule 3.

(2) The remuneration and conditions of service of *ex officio* Directors (for the avoidance of doubt, in their positions as executives of the Company) shall be approved by the Remuneration Committee of the Board and no *ex officio* director shall be entitled to any further remuneration on account of his or her Directorship with the Company.

(3) The remuneration and conditions of service of non-executive Directors shall be approved by the Member from time to time.

(4) A Director who is in the full-time service of the Government of the Republic of South Africa shall not in respect of the services rendered by him as a director be paid any remuneration in addition to his salary by virtue of such service, nor shall any such director be paid any travel and subsistence allowances at a rate other than that applicable to him by virtue of such service.

4.6 Indemnification of Directors

(1) The authority of the Company to advance expenses to a Director, or indemnify a director, in respect of the defence of legal proceedings, as set out in section 78(3) is limited, restricted or extended to the extent set out in Part F of Schedule 3.

(2) The authority of the Company to indemnify a Director in respect of liability, as set out in section 78(5) is limited or restricted to the extent set out in Part F of Schedule 3.

(3) The authority of the Company to purchase insurance to protect the Company, or a Director, as set out in section 78(7) is not limited, restricted or extended by this Memorandum.

4.7 Committees of the Board

(1) The authority of the Board to appoint committees of the Board, and to delegate to any such committee any of the authority of the Board, as set out in section 72(1), and to include in any such committee persons who are not Directors, as set out in section 73(2)(a), is not limited or restricted by this Memorandum.

(2) The authority of a committee appointed by the Board, as set out in section 72(2) (b) and (c) is limited or restricted to the extent set out in Part G of Schedule 3.

(3) The Board shall be obliged to appoint the following committees:

a) Remuneration / Human resources committee, which shall be responsible for determining the remuneration of executive Directors and management of the Company, which shall comprise independent non-executive Directors, and must be chaired by the Chairman;

b) any other committee as required in terms of the Statutes, the Companies Act and the Member Compact.

ARTICLE 5 - GENERAL PROVISIONS

5.1 Minutes and Minute Books

(1) The Directors shall, in accordance with the Companies Act and the Statutes cause minutes to be kept:

a) of all appointments of officers;

b) of names of Directors present at every meeting of the Company and of the Board; and

c) of all proceedings at all meetings of the Company and of the Directors.

(2) Such minutes shall be signed by the chairman of the meeting at which the proceedings took place or by the chairman of the next succeeding meeting.

5.3 Accounting Authority

(1) The Board is the accounting authority of the Company.

(2) The Chairman shall be the accounting officer as contemplated in the PFMA and shall be responsible, *inter alia*, for:

a) all money received by the Company;

b) any other payments made by the Company.

(3) All the Directors of the Board, as the accounting authority, must:

a) disclose to the Board any direct or indirect personal or private business interest that the director or any spouse, partner or close family member may have in any matter before the Board;

b) withdraw from the proceedings of the Board when that matter is considered, unless, subject to section 75, the Board decides that the Director's direct or indirect interest in the matter is trivial or irrelevant; and

c) comply with the provisions of section 75 relating to disclosure of personal financial interest.

5.4 Accounting Records

(1) The Directors shall maintain accurate and complete accounting records in accordance with section 28 and Chapter 6, Part 2 of PFMA. Accounting records shall not be

deemed to be properly maintained if such accounting records do not fairly present the state of affairs and business of the Company and do not fairly explain the transactions and financial position of the trade or business of the Company.

(2) The accounting records shall be kept at the registered office of the Company or at such other place or places as the Directors think fit, and shall always be open to inspection by the Directors.

(3) Subject to the Member's access to the Company's accounting records as provided in the Members Compact, the Directors shall from time to time determine whether and to what extent and at what times and places and under what conditions or regulations the accounting records of the Company or any of them shall be open to inspection by Members not being Directors, and no Member (not being a director) shall have any right of inspecting any accounting records or documents of the Company except as conferred by the Companies Act, the Members Compact, the Statues or authorised by the Directors or by the Company in general meeting.

5.5 Annual Financial Statements

(1) The Directors shall from time to time, in accordance with sections 29, the Members Compact, as well as Chapter 6, Part 2 of the PFMA, prepare Annual Financial Statements which satisfy reporting standards, and such financial statements shall be laid before the Company in general meeting. The annual financial statements of the Company shall be audited.

(2) A copy of any Annual Financial Statements, group annual financial statements and group reports which are to be laid before the Company in Annual General Meeting, shall not less than fifteen (15) days before the date of the meeting be sent to the Member.

(3) The audited Financial Statements and annual reports must:

a) fairly represent the state of affairs of the Company for the period in question; and

b) have taken into account the good and generally acceptable accounting principles and practices.

5.6 Audit

An auditor shall be appointed in accordance with Chapter 6, Part 4 of the PFMA, the Protocol and the Companies Act.

5.7 Winding-up and de registration of the Company

If the Company is wound up, the assets remaining after payment of the debts and liabilities of the Company and the costs of the liquidation shall be applied as follows:

(1) to repay Members the amounts paid up on the Shares held by each of them; and

(2) the balance (if any) shall be distributed among the Members in proportion to the number of Shares respectively held by each of them.

5.8 Amendments to the Statutes

Any amendment to the Statutes, or any re-constitution or re-enactment thereof, shall, to the extent applicable, likewise amend this Memorandum.

5.9 Members Compact

(1) The Company shall be obliged to give effect to the provisions of the Members Compact (if any). In the event that there should be any inconsistency between the provisions of this Memorandum and any such agreement, the provisions of this Memorandum of Incorporation shall prevail.

(2) Insofar as a Members Compact has been concluded and signed by and between the Member and the Company and insofar as the provisions thereof do not conflict with the Companies Act, the Statutes or this Memorandum, then the Member and the Company shall be contractually bound to and comply with the terms and conditions of the Members Compact and shall, to the extent possible, amend the provisions of this Memorandum.

Annexure

LIMITATIONS AND RESTRICTIONS OF THIS MEMORANDUM

SCHEDULE 2 – MEMBERSHIP

- **PART A**

  Shares in SFF shall be taken up by CEF (SOC) Limited only as per the provisions of the CEF Act.

  PART B

  If at any time, the Company has a Member who is also a director of the Company, as contemplated in section 57(4), the authority of that director to act without notice or compliance with any other internal formalities, as set out in that section is limited and restricted by the Levels of Authority Matrix, PFMA, Members' Compact (if any) and Company's policies.

  PART C

  In addition to the rights to access information set out in section 26(2), the Members have further rights to information as contemplated by the provisions of the PFMA, Treasury Regulations, Shareholders Compact and Protocol.

SCHEDULE 3: DIRECTORS AND OFFICERS

- **PART A**

  In addition to satisfying the qualification and eligibility requirements set out in section 69, to become or remain a Director or a prescribed officer of the Company, a person must:

  - have the necessary qualifications and possess the necessary skills as may be determined by the Company from time to time;
  - undertake to adhere at all times to the code of conduct of the Company;
  - declare annually all his business interests, including Directorships; and
  - not be a Director of more than five listed and/or public companies, or ten private or State Owned Companies (SOC).

- **PART B**

The authority of the Board to fill any vacancy on the Board on a temporary basis, as set out in section 68(3), is limited and restricted by the Levels of Authority Matrix and the Members Compact.

- **PART C**

The authority of the Board to manage and direct the business and affairs of the Company, as set out in section 66 (1) is limited and restricted by the Levels of Authority Matrix, PFMA and the Members Compact.

The authority of the Board to manage and direct the business and affairs of the Company is further limited by the following:

- the Board must, at all times, act in the best interests of the Company with cognisance of the interests of the CEF Group and its accompanying vision, mission and objectives and to avoid any conflict of interest between the Company and the CEF Group by fully disclosing all interests to the Company and to CEF;
- the Board undertakes that, without prior approval from the Members, it will not:
  - enter into any transaction envisaged in section 54(2) of the PFMA;
  - be liable, whether contingently or otherwise, or whether as surety, co-principal debtor or guarantor, for the liabilities of a third party other than in the ordinary course of its business;
  - exceed its levels of authority as set out in the Members Compact, or its Levels of Authority Matrix or as set out in this Memorandum; or
  - cause an unreasonable delay in respect of a decision to be made.

The Board undertakes that the Company shall:

- ensure that its strategy provides for financial stability;
- adhere to the provisions of the PFMA as applicable;
- ensure the reporting protocols of the CEF Group are adhered to;
- respond to a request by the Members with regards to a decision to be made within 30 days of receipt of the request, or some other reasonable period agreed upon between the Company and the Members;
- formulate policies and processes that are aligned with and consistent with the policies and processes of the Members.

- adhere to the Materiality and Significant Framework of the Company and the CEF Group.
- not procure, without the prior written consent of the Members, large capital expenditure or finance such capital expenditure, in cases where it is financed by the Members;
- seek the appropriate approvals in respect of projects undertaken or to be undertaken by the Company, notwithstanding the source of funding;
- report on: projects undertaken or to be undertaken, performance of the Company, financial status of the company, governance, human resource matters and any other matter that the members requires the company to report on at any appropriate forum, committee or structure identified by the Members; and
- remain a going concern

(Collectively, the **"Entrenched Provisions"**).

To the extent that the Board or any of the Directors fail to comply with any of the above entrenched provisions or the provisions of this MOI the Shareholder (Member) reserves its rights in terms of this MOI per Article 4 Part 6 to remove the Board or Directors of the Board.

- **PART D**

The authority of the Board to consider a matter other than at a meeting as set out in section 74 is subject to:

- each Director having received notice of the matter to be decided (as evidenced by acknowledgement of receipt of the communication from each of the Directors); and
- written consent of the majority of the Directors to the resolution.

- **PART E**

The authority of the Company to pay remuneration to Directors is limited by the provisions of the CEF Act and the PFMA.

- **PART F**

The authority of the Company to advance expenses to a director or indemnify a director in respect of the defence of legal proceedings as set out in section 78(3) is limited to the extent of the Company Insurance Cover for Directors and Officers Liabilities. Furthermore, the Company shall in compliance with section 78 not indemnify a director against liability arising from:

- wilful misconduct or breach of trust by the director;
- director acting without the necessary authority;
- reckless trading;
- trading under insolvent circumstances;
- fraudulent acts of the Director;
- a fine related to an offence committed by the Director in terms of any national legislation unless based on strict liability; and
- a breach of the CEF Act.

- **PART G**

The authority of a committee appointed by the Board, as set out in section 72(2) (b) and (c) is limited and restricted by the terms of Levels of Authority Matrix and the Board charter.

REPUBLIC OF SOUTH AFRICA

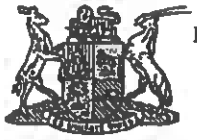

REPUBLIEK VAN SUID-AFRIKA

64/00002/08

No.
21/64/2

Certificate of Incorporation
Sertifikaat van Inkorporasie

I hereby Certify that
Ek Sertifiseer hierby dat

ORIGINAL
INDISTINCT
OORSPRONKLIKE
ONDUIDELIK

S.P.P. ASSOCIATION

was this day incorporated under the Companies Act, 1926 (*Act No.* 46 *of* 1926)
vandag geïnkorporeer is ingevolge die Maatskappywet, 1926 (*Wet No.* 46 *van*

and that the Company is LIMITED
1926), *en dat die Maatskappy BEPERK is*

Signed at PRETORIA
Geteken te PRETORIA

this *day of*
hede die EIGHTEENTH *dag van* JUNE,

One thousand Nine hundred and
Eenduisend Negehonderd SIXTY-FOUR.

P.C. McLACHLAN.
for *Registrar of Companies*
namens *Registrateur van Maatskappye*

ANNEXURE S3: BBBEE CERTIFICATE

ANNEXURE S3

TRANSFORM
constant change

SFF ASSOCIATION NPC

BBBEE Contribution Level:

Non-Compliant

BEE Supplier Recognition:

0%

A Transformex Generic Specialised Verification Scorecard

Products and Services	**Management of Strategic Stocks of Crude Oil in accordance with Ministerial Directives, Oil Pollution Services, Rental of storage tanks & Jetty & Pipeline Handling Fees**
Physical Address	151 Frans Conradie Drive, Parow, Cape Town, 7500
Registration Number	1964/010277/08
Vat Number	4840103164

Scorecard Elements	Maximum Score	Company Score	Principle Used	Yes/No
BEE Ownership	N/A	N/A	Modified Flow through	No
BEE Management Control	20.00	15.42	Exclusion Principle	No
Skills Development	30.00	8.72	Discounting Principle	Yes
Enterprise & Supplier Development	54.00	20.10	Participated in Y.E.S Initiative	No
Socio-Economic Development	5.00	2.23	Achieve Y.E.S Target and 2.5% Absorption	No
Youth Empowerment Service	N/A	N/A	Achieve 1.5 x Y.E.S Target and 5% Absorption	No
Total Score	109.00	46.47	Achieve Double Y.E.S Target and 5% Absorption	No
Empowering Supplier	YES		Issue Date	26 August 2022
Certificate Number	SFF001G7480822		Re-Issue Date	N/A
Issue Number	1		Expiry Date	25 August 2023

Analysis	Result	Analysis	Result
Black Economic Ownership:	N/A	Black Disabled Ownership:	N/A
Black Voting Rights:	N/A	Black Unemployed Ownership:	N/A
Black Women Economic Ownership:	N/A	Black People living in Rural Areas:	N/A
Black Women Voting Rights:	N/A	Black Military Veterans:	N/A
Black Designated Ownership:	N/A	Black New Entrant:	N/A
Black youth Ownership:	N/A		

Financial Year End:	31 March 2022
Measurement Period:	01 April 2021 - 31 March 2022
Standard Used:	Amended Codes of Good Practice on BEE: Gazette No. 36928 and Gazette No. 38766
Act	Broad-Based Black Economic Empowerment Amendment Act, 2013: Gazette No. 37271

Carmanthra Naidoo
For Transformex CC
TRANSFORMEX CC. Reg 2007/043419/23
Contact 011 477-5622 or visit www.transformex.co.za

sanas
BVA 151
CO007-C3: GENERIC VERIFICATION CERTIFICATE V01R101020

ANNEXURE S4: PROPOSED PIPELINE ROUTE

CONFIDENTIAL IN ENTIRETY

ANNEXURE S4

Figure 4.3: Aerial photograph of Port of Saldanha, showing proposed pipelines routing Option C.

Pipeline Routing Option C: From Berth 104, supported off Langebaan side of jetty, new valve chamber, buried next to existing Crude Oil lines, only one pipeline cross Haul Rd + Railways through existing culvert, on Saldanha side of entrance Rd to new White Oils manifold; LPG pipeline continues along same route as existing Crude Oil lines, around pond to join Sunrise-to-Avedia servitude to Avedia; LPG pipeline continues along MR559 (northern side) to new SFF LPG Terminal.

<u>Discussion points on route:</u>

- White Oil 4.95 km
- LPG Pipeline to Avedia 7.5 km (and then additional 5.4 km to SFF)
- Only one railroad crossing (white oils),
- Longest route for LPG
- Sharing servitude with Sunrise

SFF Berth 104 Saldanha Development Concept Review 16613P

ANNEXURE S4

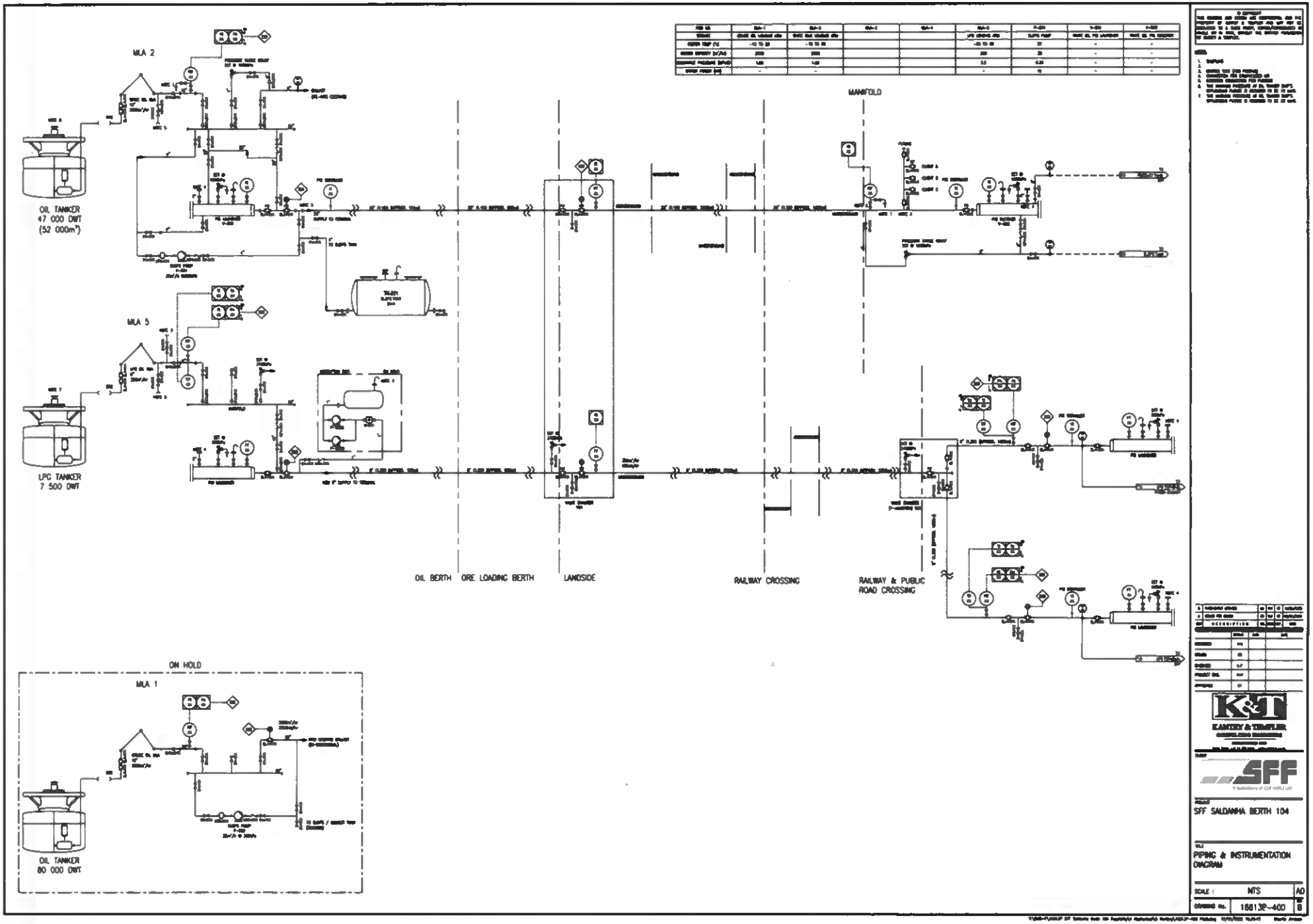
MLA 2
OIL TANKER
47 000 DWT
(52 000m³)
MLA 5
LPG TANKER
7 500 DWT
MANIFOLD
OIL BERTH
ORE LOADING BERTH
LANDSIDE
RAILWAY CROSSING
RAILWAY & PUBLIC
ROAD CROSSING
ON HOLD
MLA 1
OIL TANKER
80 000 DWT
K&T
KANTEY & TEMPLER
SFF
SFF SALDANHA BERTH 104
PIPING & INSTRUMENTATION
DIAGRAM
SCALE : NTS
A0
DRAWING No. 166132-400
B

ANNEXURE SS: CAPEX BUDGET 2024

CONFIDENTIAL IN ENTIRETY

ANNEXURE SS1: SFF BOARD EXTRACT – AVEDIA ENERGY ACQUISITION

CONFIDENTIAL IN ENTIRETY

ANNEXURE SS3: BUSINESS CASE – AVEDIA ACQUSITION

CONFIDENTIAL IN ENTIRETY